Monarch Library System
Technology & Resource Sharing Plan
2020-2024

Prepared by:
Jennifer Chamberlain, Interim System Director
jchamberlain@monarchlibraries.org

Robert Nitsch, Technology Manager
rnitsch@monarchlibraries.org

Alison Hoffman, ILS Administrator
ahoffman@monarchlibraries.org

Approved by Monarch Library System board on November 14, 2019.

Introduction and Purpose

Monarch Library System is a four-county federated library system serving 33 members: 31 brick & mortar public libraries, 1 bookmobile, and 1 academic library (Lakeland University). All public libraries and the bookmobile receive technology support services from Monarch, while Lakeland University, the bookmobile and all but one public library participate in the shared ILS.

OUR MISSION

The Monarch Library System is committed to strengthening our member libraries by facilitating collaboration and assisting libraries in enhancing technology, collections, and services for the benefit of their local communities.

OUR VALUES

The Monarch Library System honors and upholds the following core values as we engage with our member libraries and communities. We strive to incorporate these values in all the work we do.

- User-centered service
- Effective collaboration and communication
- Equity, diversity, and inclusivity
- Professionalism
- Continuous Improvement
- Responsiveness
- Innovation
- Efficiency

The purpose of this plan is to detail how technology and resource sharing services directly align with the Monarch Library System mission, values, and direction. We strive to make the most effective use of technologies that result in enhanced service, greater efficiencies, or cost reduction.

Improving and expanding technology services throughout our system is a thread woven throughout our current strategic directions (2019-2021), but specifically mentioned in directions #2-5:

Strategic Directions, 2019-2021

Direction #1: Support our member libraries in their mission to serve as vital community and information hubs.

- Offer branded marketing tools for each system-supported service to attract and educate users.
- Provide access to relevant and in-demand digital content.
- Offer robust array of continuing education opportunities for directors and library staff.
- Foster inclusiveness through collections, resources, and service development.
- Support collaborative programming efforts.
- Continue efforts to provide high quality, five day/week material delivery.
- Advocate for our member libraries with local and state governing bodies.

Direction #2: Maximize the user experience in our integrated library system.

- Empower member libraries to make the fullest use of available ILS tools and options.
- Employ ILS tools that improve the user interface and accessibility.
- Acquire collections and services that integrate well with the ILS and are intuitive for patrons.

Direction #3: Support and develop a system culture of engagement and full participation of all member libraries.

- Improve access to system-wide meetings via technologies, rotating locations, and other means to encourage greater participation.
- System staff regularly visit libraries and interact with member library staff.
- Support and encourage use of tools such as interest groups and Monarch Connect & Share.
- Develop opportunities for discussion and engagement among all staff across member libraries around current trends or significant topics within the profession.

Direction #4: Improve business operations and system office culture for the betterment of service provision.

- Develop processes and strategies to advance efficiency, employee expertise, and communication with our member libraries.
- Maximize employee expertise and capacity to allow time for new initiatives and innovation.
- Ensure all employees have training in current tools and technologies.

Direction #5: Serve as leaders in new technology adoption and integration.

- Develop replacement plan for aging servers.
- Pursue kiosk solution to replace public catalog-access machines.
- Support solutions for file sharing and back up, and virtual collaborative workspaces.
- Explore automation of WIFI network statistics collection.
- Implement a new WSUS (Windows Server update service) server.

Background

Monarch Library System (Monarch) began in 2017 as a merger of two systems: Eastern Shores Library System and Mid-Wisconsin Federated Library System, each with different technology service models and modes for material delivery. Technology services were redesigned in the merger to allow for expanded technology services, and a commitment was made to maintain a system-run delivery service for all four counties.

In order to deliver enhanced technology services ("cradle-to-grave"), Monarch increased the technology team staff, with two positions added in 2018. There has been an intentional movement toward the standardization of networking equipment to improve response time, expand capability for remote support, and develop redundancies to stabilize services.

Various groups within Monarch influence the technology and resource sharing services within the system. All member library directors participate in our directors' council which provides input and guidance on technology services.

The technology workgroup, comprised of system and member library staff and directors, serves as a subgroup to the directors' council to provide recommendations on technology services and innovations.

The ILS committee sets policies, standards, and plans for the development, implementation, and maintenance of the ILS. Additionally, a resources workgroup was added in 2018 to focus on building opportunities for and overseeing any shared digital resources.

Needs and Assets Assessment

Monarch has a variety of factors that impact our ability to provide consistent technology services at all member libraries. First, there is a vast size difference of libraries throughout the system, from very rural to urban, as well as varied technical expertise at the local level.

Secondly, the infrastructure is aging, with most of our servers dating back to 2013. This plan must address how we will replace our primary servers, whether replacing our local server equipment and continuing to host locally, or alternatively exploring options for virtualizing our server environment offsite. Additionally, the locally installed network equipment that existed prior to the merger was not standardized, causing our technology staff to learn a variety of equipment and configurations. In 2020, we are implementing a standardized network footprint (router, switch, and access point) that should remedy these variances. Only two libraries will be exceptions to this footprint (Mequon and Sheboygan).

Back-up environment – Monarch needs to find an alternative for a robust, back-up environment for our ILS and network. In the wake of the Public Library System Redesign project, Monarch is participating in a new statewide back-up collaborative project as an attractive solution for our back-up needs.

Disaster Recovery Planning: Monarch does not have a comprehensive technology disaster recovery plan. Given the 24/7 operations of Internet and ILS, a plan for recovering the data, software, and hardware after a disaster should be in place. The plan should be developed with System staff, library directors, and vendors as necessary.

Infrastructure and Inventories

The System offers a wide range of technology related services for its member libraries.

Local Area Network (LAN) and Wide Area Network (WAN)

- MLS member libraries all have fiber connections back to the Monarch office. This is provided by the TEACH & BadgerNet through AT&T.
- Each library either has a 100Mb or 50Mb connection back to the MLS office.
- The MLS office has a 1Gb connection from BadgerNet with 600Mb of this to the libraries and 400Mb to WiscNet.
- WiscNet is the systems ISP (Internet Service Provider), for connecting to the internet.
- The LAN connection at each library is managed by a Cisco Firepower 1010 firewall and a Cisco 2960 network switch.
- At the headend, which is located at Monarch Library System, there is a Cisco Firepower 2110 appliance for network routing and security.

Servers

- We currently have two virtual server environments.
- The Polaris four production servers are on a Hyper-V environment.
- There are five maintenance servers on a VMware environment.
- We have several physical servers running domain controllers, the shared integrated library system's (ILS's) outbound telephone notification system, and both storage and the public website for Monarch's historical digital collections program.
- All servers are running Windows Server 2008 or above.

Workstations

- MLS office has 5 workstations running Windows 10 Pro
- MLS office has 4 Laptop computers also running Windows 10 Pro
- Most library guest and staff PCs are running Windows 10 Pro.

Phone System

- MLS has a contract with AT&T with their government Centrex Service.
- Our NEC UX5000 PBX allows for 8 extensions

- All employees have access to voice mail.
- Libraries manage their own PBX and voicemail services.

Other equipment managed by Monarch Library System

- Two 5 laptop computer labs running Windows 10 Pro with a projector.
- Two audio recording kits
- Two digitization kits
- One MakerBot 3D printer
- Stop Motion Video Recording Lab
- Oculus Rift Virtual Lab
- Cricut Explorer Lab

Web Presence: The System maintains a web server to provide related ILS web services. The System contracts with a commercial web hosting provider (iPage) to provide web sites for most of our libraries. Other member libraries have their own web host providers.

Shared Integrated Library System (ILS): The System and all but one of the member libraries use the Polaris Integrated Library System from Innovative Interfaces. (Beaver Dam Public Library operates on a stand-alone ILS, Sirsi-Dynix) The Polaris ILS provides the following functions for staff:

1. Circulation
2. Cataloging
3. Serials management
4. Acquisitions – includes Electronic Data Interchange (EDI) with select vendors for electronic ordering and invoices.
5. Inventory support
6. Outreach Services support
7. Collection Agency integration – enables libraries to send delinquent patron accounts to a collection agency which specializes in collections for libraries.
8. Staff Client Find Tools - allow staff to search Polaris databases
9. Polaris Reports - provides canned reports for staff to run
10. Simply Reports – an add-on report generation tool for library staff to query the databases for many kinds of reports not already offered via other Polaris reporting tools.
11. Telephony – an outbound telephone notification system that automatically calls borrowers regarding items on hold and overdue material.
12. Email and Text Message Notifications – patrons can choose to have notices sent to them via text, email, or both.
13. Public Catalog – the catalog is available in two forms: via a standard website with a responsive design compatible with all devices (desktops, tablets, and smart phones) and via a mobile app. Patrons can view cover art, view/add reviews, and read summaries or first chapters of books. Patrons can place requests for items and view their account information online.
14. Integrated e-content circulation which allows for patron authentication for access to remote OverDrive collections as well as circulation of that material through the public catalog.
15. Patron Self-service checkout – several libraries allow patrons to check out materials on their own.

16. RFID – five libraries currently use Radio Frequency Identification (RFID). This technology allows libraries greater inventory control over materials, as each item has a small chip to identify the item via radio waves. We may explore options to expand RFID in collections owned at other MLS libraries.
17. The server is Z39.50 compliant and accessible as part of the State's WISCAT catalog for ILL and resource sharing.
18. PC Management software – while not part of Polaris, the ILS works with vendors to allow libraries to access the patron database to authenticate patrons' use of public Internet computers.

Data

In terms of the aging of the network and server environment and equipment, the data point is simply the age of equipment in comparison with accepted best practices. Most of our outlined goals have been crafted with input from directors' council and the technology workgroup.

Additionally, the decision around creating a consistent WiFi environment across all member libraries was to respond to poor functionality of accessing shared resources (such as…) via WiFi.

As we have engaged in this planning process, we have identified a need for future data regarding our average response time to technology requests via tickets. In future technology plans, we would like to set an aspirational goal or threshold for average response time.

Resource Sharing

The vast majority of the resource sharing within MLS takes place through our Monarch catalog. All MLS public libraries participate fully in the Wisconsin interlibrary loan network through WISCAT. MLS staff provides technical support for library staff using WISCAT ILL.

Delivery - To support movement of materials, MLS provides an in-house, five days/week delivery service. MLS also contracts with South Central Library System for van delivery four days/week to connect with other public library systems, the University of Wisconsin libraries, and correctional facilities.

Integrated Library System (ILS) - 32 of our member libraries (1 academic, 1 bookmobile/outreach, 30 public libraries) participate and share in Monarch's ILS. The System currently uses Innovative Interfaces' Polaris client. Beaver Dam Public Library operates on a stand-alone ILS, Sirsi-Dynix, however the BDPL does participate in our delivery network.

WAN – Most of our member libraries share in our wide area network. Exceptions to this are: Beaver Dam, Lakeland University, and Mequon/Thiensville. The latter will be joining our WAN in 2020. The head end is located at the Monarch Library System headquarters.

E-content – Monarch Library System is taking a more active role in securing system-wide subscriptions to valuable digital content. Investing in RB Digital e-magazines and e-audio, Gale courses, and increasing our contributions to the System's Overdrive Advantage account (holds reduction), we are sharing more resources electronically than ever before. We are hoping to explore additions to our shared e-content offerings which may include a language learning database, additional streaming content services, and

others when the system is able to secure favorable pricing or other system-wide advantages to a collaborative subscription.

Goals and Activities

Goal 1: Maximize the user experience in our integrated library system (ILS).

Objectives:

1. Empower member libraries to make the fullest use of available ILS tools and options.
    a. Continue to develop training materials and documentation and explore alternate modes of delivery
2. Employ ILS tools that improve the user interface and accessibility.
    a. Explore add-ons and new or alternate modules and services that integrate well with the ILS and are intuitive for patrons

Goal 2: Maintain and enhance technology infrastructure of the Monarch network and member libraries.

Objectives:

1. Upgrade and standardize all routers/switches at member libraries – develop a replacement cycle and replacement contingency fund (in progress).
2. Enhance Aerohive statistics for improved WIFI statistics.
3. Participate in the statewide back-up collaborative to improve our capacity for reliable back-ups to our vital platforms.
4. Create and implement a Technology Disaster Recovery Plan for the System and member libraries.
5. Review and evaluate centralized computer software applications updates and installations similar to Windows Server Update Services.
6. Create new virtual server environment using VMWare.
7. Have two VMWare servers that will host all servers.
8. Maintain one physical server as a Domain Controller.
9. All servers will be running Windows Server 2019.

Goal 3: Save member libraries time and money around technology purchases.

Objectives:

1. Facilitate group purchases of technology-related equipment with an eye on standardization.
    a. Dell purchasing through state consortium.
    b. Annual fall technology group purchase.
2. Provide assistance in making technology-related purchases and decisions.

Goal 4: Prioritizing rich communication, idea sharing, and professional development opportunities among member libraries utilizing technology that enable collaborative approaches.

Objectives:

1. Improve response time for ticketing system, including exploring other software that might improve our communication on technology troubleshooting with our member libraries.
2. Develop a known issue tracking system that communicates platform status updates to all member libraries in real-time.
3. Offer professional development opportunities around new, emerging technologies as well as refresher trainings on existing core technologies.
    a. Explore coordinating a cohort in Gale courses on Excel – announcing when a class is starting in advance of budget season.
4. Create clear communication and access to shared documentation, best practices, resources, etc.
    a. Maximize the website effectively
    b. Continue to invest in Monarch Connect & Share platform

Goal 5: Support the development of local digital collections.

Objectives:

1. Continue to develop training materials and gather resources to support library interest in digitization projects.
2. Explore and implement improvements to the user experience of the digital collection.
3. Expand the reach of the collection through public relations activities

Evaluation

The evaluation of this Technology & Resource Sharing Plan will be reviewed annually in the early fall by the System Director, the Technology Manager, the ILS Administrator in consultation with the library directors, any relevant committees, and the System board of trustees. This plan is considered a living document and will be revised as necessary.

Typical Library Network

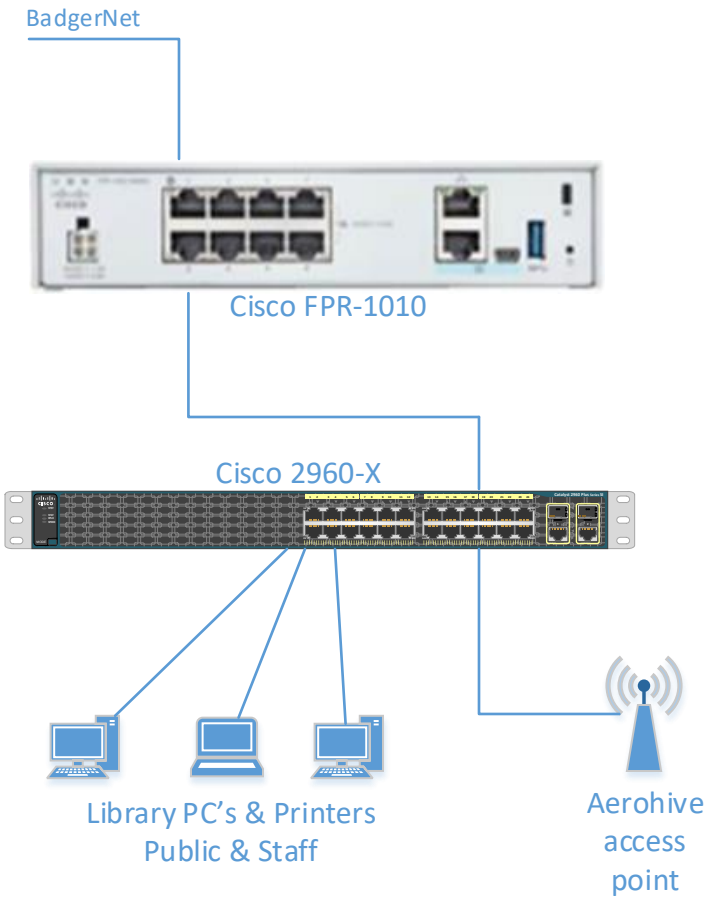

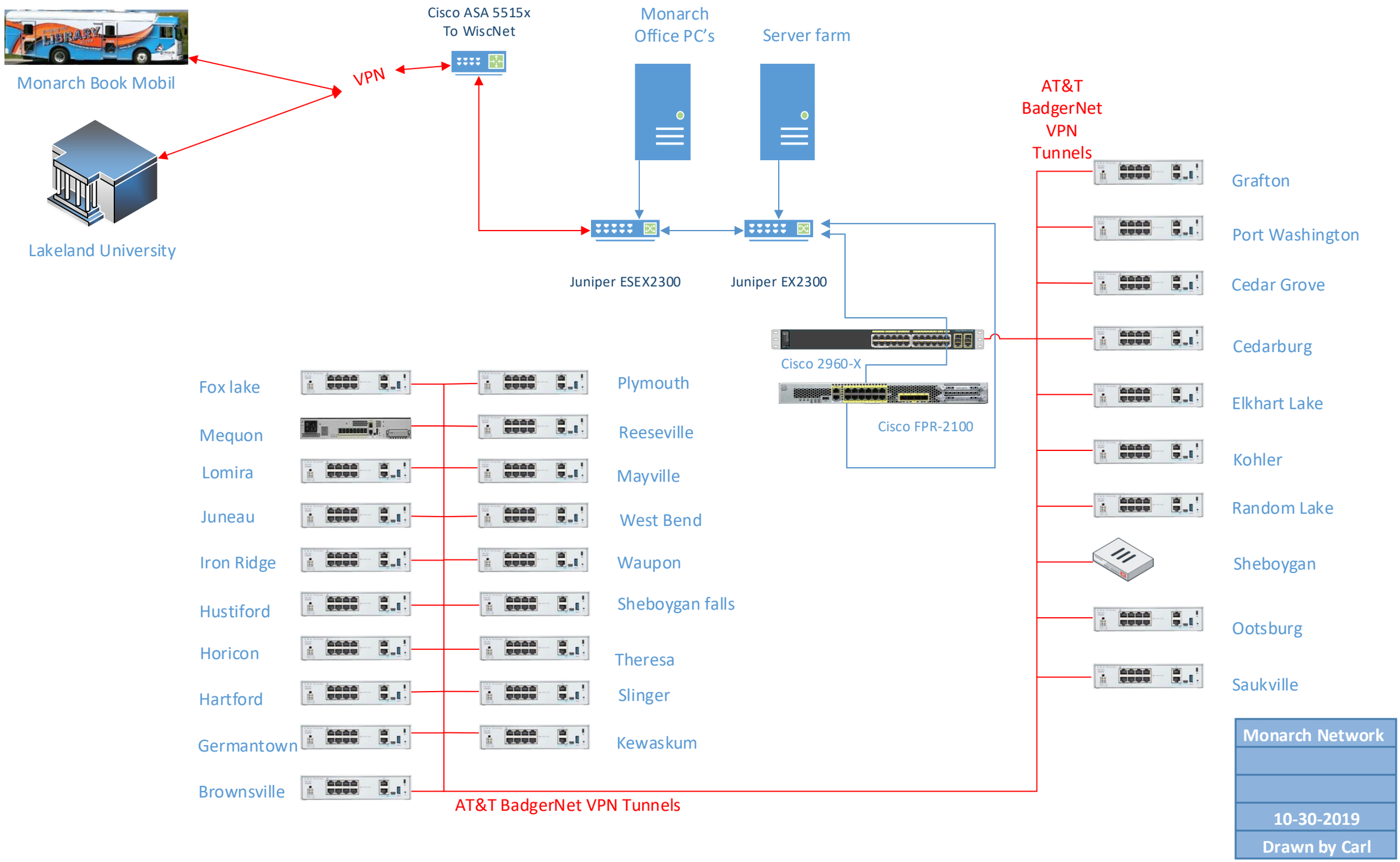
Monarch Book Mobil
Lakeland University
VPN
Cisco ASA 5515x
To WiscNet
Monarch
Office PC's
Server farm
Juniper ESEX2300
Juniper EX2300
Cisco 2960-X
Cisco FPR-2100
AT&T
BadgerNet
VPN
Tunnels
Grafton
Port Washington
Cedar Grove
Cedarburg
Elkhart Lake
Kohler
Random Lake
Sheboygan
Ootsburg
Saukville
Fox lake
Mequon
Lomira
Juneau
Iron Ridge
Hustiford
Horicon
Hartford
Germantown
Brownsville
Plymouth
Reeseville
Mayville
West Bend
Waupon
Sheboygan falls
Theresa
Slinger
Kewaskum
AT&T BadgerNet VPN Tunnels
Monarch Network
10-30-2019
Drawn by Carl