WISCONSIN STANDARDS FOR

Music

Wisconsin Department of Public Instruction

WISCONSIN STANDARDS FOR
Music

Wisconsin Department of Public Instruction
Tony Evers, PhD, State Superintendent
Madison, Wisconsin

This publication is available from:

Wisconsin Department of Public Instruction
125 South Webster Street
Madison, WI 53703
(608) 266-8960
https://dpi.wi.gov/fine-arts/music/education-standards

November 2017 Wisconsin Department of Public Instruction

The Wisconsin Department of Public Instruction does not discriminate on the basis of sex, race, color, religion, creed, age, national origin, ancestry, pregnancy, marital status or parental status, sexual orientation; or ability and provides equal access to the Boy Scouts of America and other designated youth groups.

Table of Contents

Foreword iv
Acknowledgements v

Section I: Wisconsin's Approach to Academic Standards 1
Purpose of the Document 2
What Are the Academic Standards? 3
Relating the Academic Standards to All Students 4
Ensuring a Process for Student Success 5
References 6

Section II: Wisconsin Standards for Music 7
What is Music Education? 8
Wisconsin's Vision for Music Education 9
Standards Conceptual Focus 9
Wisconsin's Approach to Standards for Music 10
Resources 12
Components of the Standards 13
Music Strands 13
Standards Structure 14

Section III: Discipline: Music Standards 15
Wisconsin Standards for Music, General Music Strand 16
Wisconsin Standards for Music, Performance Music Strand 22

Foreword

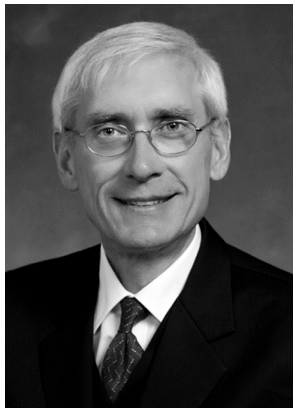

Music is an essential part of a comprehensive Pre-K-12 education for all students. The knowledge, techniques, and citizenry skills gained through the music education programming across the state supports the overall goal of helping all students become career and college ready.

I am pleased to offer you the 2017 *Wisconsin Standards for Music*. This set of academic standards provides a foundational framework that identifies what students should know and be able to do in music. The standards introduce the analytical elements and aesthetic expressive qualities of music to all students through four artistic processes: Create, Perform, Respond, and Connect. These four standards are applied through general music and performance music opportunities. The framework highlights a foundational set of skills and knowledge with actionable indicators for music classroom experiences. An additional focus within the standards includes building student knowledge of music across time and cultures. This area, along with the opportunities to engage in music through performance, offers a solid musical base for districts to develop their own curriculum.

The *Wisconsin Standards in Music* is practical, relevant, and conceptual in nature, allowing school districts to tailor the instructional practices and resources required to support students' demonstration of what they should know and be able to do in music throughout their school career. The Wisconsin Department of Public Instruction will continue to build upon this work through the addition of resources for the field. I am excited to share the *Wisconsin Standards in Music*, which aims to build of musical skills, knowledge, and engagement opportunities with all of our students.

Tony Evers, PhD
Wisconsin State Superintendent of Public Instruction

Acknowledgements

This work is made possible through the efforts of a dedicated team of educators, administrators, higher education staff, and music industry professionals. The *Wisconsin Standards for Music* (2017) was shaped with the goal of creating a tool for educators, parents, community members, and learners to use in their building of skills and knowledge in music. Members of the writing committee donated numerous hours and shared their expertise in the development of the theatre standards document.

Wisconsin Standards for Music Writing Team

Co-Chairs: **Marie Northup**, Maine Elementary School, Wausau School District
Michael Van Pelt, Riverside University High School, Milwaukee Public Schools

DPI Liaison: **Julie Palkowski,** Arts and Creativity Education Consultant

Members:

Kevin Erickson
Kettle Moraine High School, Kettle Moraine School District

Nancy Fairchild
Platteville High School, Platteville Public Schools, University of Wisconsin–Platteville

Jody Gawron
Red Creek Elementary School and Forrest Street Early Learning Center, School District of Black River Falls

Shawn Gudmunsen
St. Croix Falls High School, St. Croix Falls School District

Brandi Hawley
Robinson Elementary School, School District of Beloit

Leslie Hill
Walker Middle School, Sturgeon Bay Schools

Cathy Houchin
Webster Elementary School, Watertown Unified School District

Christine Hulmer
Ashland High School, School District of Ashland

Michelle Kaebisch, Oregon High School, Oregon School District

Craig Pynenberg
Hillcrest Primary School, Shawano School District

Brad Stoughton
Fall Creek High School, Fall Creek School District

Department of Public Instruction, Academic Standards

- John W. Johnson, Director, Literacy and Mathematics, and Director for Academic Standards
- Meri Annin, Lead Visual Communications Designer
- Marci Glaus, Strategic Communications Consultant
- David McHugh, Strategic Planning and Professional Learning Consultant

Department of Public Instruction Leaders

- Sheila Briggs, Assistant State Superintendent, Division of Academic Excellence
- Emilie Amundson, Chief of Staff, Office of the State Superintendent
- Scott Jones, Special Assistant, Office of the State Superintendent
- Rebecca Vail, Director, Content and Learning

Section I

Wisconsin's Approach to Academic Standards

Purpose of the Document

The purpose of this guide is to improve music education for students and for communities. The Wisconsin Department of Public Instruction (DPI) has developed standards to assist Wisconsin educators and stakeholders in understanding, developing and implementing music course offerings and curriculum in school districts across Wisconsin.

This publication provides a vision for student success and follows The Guiding Principles for Teaching and Learning (2011). In brief, the principles are:

1. Every student has the right to learn.
2. Instruction must be rigorous and relevant.
3. Purposeful assessment drives instruction and affects learning.
4. Learning is a collaborative responsibility.
5. Students bring strengths and experiences to learning.
6. Responsive environments engage learners.

Program leaders will find the guide valuable for making decisions about:

- Program structure and integration
- Curriculum redesign
- Staffing and staff development
- Scheduling and student grouping
- Facility organization
- Learning spaces and materials development
- Resource allocation and accountability
- Collaborative work with other units of the school, district, and community

What Are the Academic Standards?

Wisconsin Academic Standards specify what students should know and be able to do in the classroom. They serve as goals for teaching and learning. Setting high standards enables students, parents, educators, and citizens to know what students should have learned at a given point in time. In Wisconsin, all state standards serve as a model. Locally elected school boards adopt academic standards in each subject area to best serve their local communities. We must ensure that all children have equal access to high-quality education programs. Clear statements about what students must know and be able to do are essential in making sure our schools offer opportunities to get the knowledge and skills necessary for success beyond the classroom.

Adopting these standards is voluntary. Districts may use the academic standards as guides for developing local grade-by-grade level curriculum. Implementing standards may require some school districts to upgrade school and district curriculums. This may result in changes in instructional methods and materials, local assessments, and professional development opportunities for the teaching and administrative staff.

What is the Difference Between Academic Standards and Curriculum?

Standards are statements about what students should know and be able to do, what they might be asked to do to give evidence of learning, and how well they should be expected to know or do it. Curriculum is the program devised by local school districts used to prepare students to meet standards. It consists of activities and lessons at each grade level, instructional materials, and various instructional techniques. In short, standards define what is to be learned at certain points in time, and from a broad perspective, what performances will be accepted as evidence that the learning has occurred. Curriculum specifies the details of the day-to-day schooling at the local level.

Developing the Academic Standards

DPI has a transparent and comprehensive process for reviewing and revising academic standards. The process begins with a notice of intent to review an academic area with a public comment period. The State Superintendent's Standards Review Council examines those comments and may recommend revision or development of standards in that academic area. The state superintendent authorizes whether or not to pursue a revision or development process. Following this, a state writing committee is formed to work on those standards for all grade levels. That draft is then made available for open review to get feedback from the public, key stakeholders, educators, and the Legislature with further review by the State Superintendent's Standards Review Council. The state superintendent then determines adoption of the standards.

Aligning for Student Success

To build and sustain schools that support every student in achieving success, educators must work together with families, community members, and business partners to connect the most promising practices in the most meaningful contexts. The release of the *Wisconsin Standards for Music* provides a set of important academic standards for school districts to implement. This is connected to a larger vision of every child graduating college and career ready. The graphic below illustrates the relationship between academic standards and other critical principles and efforts that function together to educate every child to graduate college and career ready. Here, the vision and set of Guiding Principles form the foundation for building a supportive process for teaching and learning rigorous and relevant content. The following sections articulate this integrated approach to increasing student success in Wisconsin schools and communities.

Relating the Academic Standards to All Students

Grade-level standards should allow ALL students to engage, access, and be assessed in ways that fit their strengths, needs, and interests. This applies to the achievement of students with IEPs (individualized education plans), English learners, and gifted and talented pupils, consistent with all other students. Academic standards serve as the foundation for individualized programming decisions for all students.

Academic standards serve as a valuable basis for establishing concrete, meaningful goals as part of each student's developmental progress and demonstration of proficiency. Students with IEPs must be provided specially designed instruction that meets their individual needs. It is expected that each individual student with an IEP will require unique services and supports matched to their strengths and needs in order to close achievement gaps in grade-level standards. Alternate standards are only available for students with the most significant cognitive disabilities.

Gifted and talented students may achieve well beyond the academic standards and move into advanced grade levels or into advanced coursework.

Our Vision: Every Child a Graduate, College and Career Ready

We are committed to ensuring every child graduates from high school academically prepared and socially and emotionally competent. A successful Wisconsin student is proficient in academic content and can apply their knowledge through skills such as critical thinking, communication, collaboration, and creativity. The successful student will also possess critical habits such as perseverance, responsibility, adaptability, and leadership. This vision for every child as a college and career ready graduate guides our beliefs and approaches to education in Wisconsin.

Guided by Principles

All educational initiatives are guided and impacted by important and often unstated attitudes or principles for teaching and learning. *The Guiding Principles for Teaching and Learning (2011)* emerge from research and provide the touchstone for practices that truly affect the vision of Every Child a Graduate Prepared for College and Career. When made transparent, these principles inform what happens in the classroom, direct the implementation and evaluation of programs, and most importantly, remind us of our own beliefs and expectations for students.

Ensuring a Process for Student Success

For Wisconsin schools and districts, implementing the *Framework for Equitable Multi-Level Systems of Supports (2017)* means providing equitable services, practices, and resources to every learner based upon responsiveness to effective instruction and intervention. In this system, high-quality instruction, strategic use of data, and collaboration interact within a continuum of supports to facilitate learner success. Schools provide varying types of supports with differing levels of intensity to proactively and responsibly adjust to the needs of the whole child. These include the knowledge, skills, and habits learners need for success beyond high school, including developmental, academic, behavioral, social, and emotional skills.

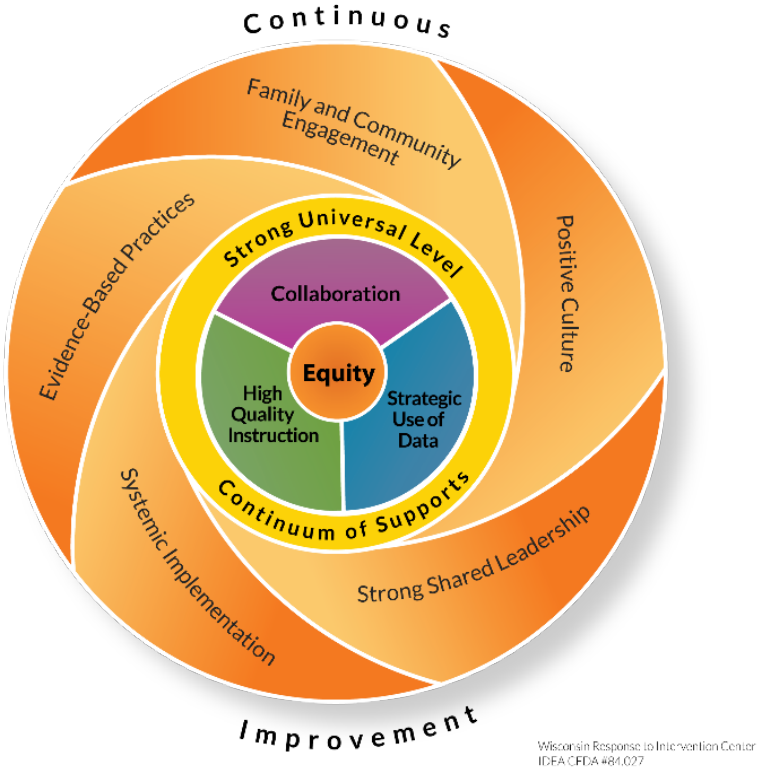

Connecting to Content: Wisconsin Academic Standards

Within this vision for increased student success, rigorous, internationally benchmarked academic standards provide the content for high-quality curriculum and instruction and for a strategic assessment system aligned to those standards. With the adoption of the standards, Wisconsin has the tools to design curriculum, instruction, and assessments to maximize student learning. The standards articulate what we teach so that educators can focus on how instruction can best meet the needs of each student. When implemented within an equitable multi-level system of support, the standards can help to ensure that every child will graduate college and career ready.

References

The Guiding Principles for Teaching and Learning. 2011. Madison, WI: Wisconsin Department of Public Instruction. Retrieved from https://dpi.wi.gov/standards/guiding-principles.

Framework for Equitable Multi-Level Systems of Supports. 2017. Madison, WI: Wisconsin Department of Public Instruction. Retrieved from https://dpi.wi.gov/rti.

Section II

Wisconsin Standards for Music

What is Music Education?

Wisconsin defines music education as an academic discipline that explores music through developmental experiences involving singing, playing instruments, listening, movement, creative expression, and music reading. The standards outlined in this document provide an important foundation to prepare students for postsecondary education and careers.

Music Education in Wisconsin

Music is part of a comprehensive public school education in Wisconsin. The overall focus of music is to build students' skills and knowledge through experiential musical activities. Four processes supporting student development involve the artistic areas of: **Create**, **Perform**, **Respond**, and **Connect**. Each of these processes provides students with foundational opportunities to investigate the arts through an inquiry-based lens. The artistic areas encourage students to be creative and innovative in their musical pursuits; to articulate through words, composition, and performance; and to identify aspects of music across time and cultures. This continuum of learning supports our students by fostering their curious, reflective, and thoughtful nature and supporting their citizenry skills through individual and group ensemble work. These artistic processes and activities aim to provide a foundational set of skills and knowledge for students to make them college and career ready.

The 2017 *Wisconsin Standards for Music* provide a condensed set of academic standards for schools to use in developing their own curriculum. In Wisconsin, a wide variety of music education programming is available to students. This document offers a single set of standards to guide and prepare students to be college and career ready in all school settings and music classes, including traditional, Advanced Placement (AP), International Baccalaureate (IB), Montessori, and other models. School communities have the opportunity to tailor and expand these areas through their own curriculum work.

Wisconsin's Vision for Music Education

The Wisconsin vision for music education is shaped by Wisconsin educators, experts, and the business community. It is informed by work being done at the national level and by other states. The goal for music education is to introduce the analytical elements and aesthetic expressive qualities of music to all students. Wisconsin's vision for K-12th grade music is to:

1. Introduce the fundamental concepts and aesthetic aspects of music to all students, beginning in elementary school levels
2. Present music at the secondary level that expands exploration through more performance opportunities and engagement of the art form

3. Offer additional secondary-level music experiences that will allow interested students to study music in depth and prepare them for entry into a career or college
4. Offer opportunities for students to demonstrate their musical knowledge and skills through the artistic processes of: Create, Perform, Respond, and Connect
5. Increase the knowledge of music for all students through investigating various aspects of music across time and cultures

Standards Conceptual Focus

At the elementary level, music standards support a conceptual framework allowing for music professionals and school communities to add in more curricular details of the types of resources, materials, and specific activities that students may be engaged in. The conceptual artistic processes of Create, Perform, Respond, and Connect weave through all of the grade bands in this standards set. The standards performance indicators highlight an intentional use of active terms, which coincide with Bloom's Taxonomy. The indicators promote Bloom's Taxonomy categories of remembering, understanding, applying, analyzing, evaluating, and creating.

The continuity of this guide allows a sequential progression of skills for students to build upon from kindergarten through 12th grade. The overall expectations for each grade band highlight the goals for all students in each level. Supplemental resources will be added later. Please consider what resources might be helpful to you in your practice supporting the musical knowledge and skills of our Wisconsin students.

The writing team's goal is to create a set of music standards that are useful in building the capacity of *all* music learners in Wisconsin, no matter the focus of the class (general or performance). In addition, we aim to have a tool which highlights the essential skills and knowledge that educators and school communities can use to shape a comprehensive music education for all students. The intent of the work presented here is to provide music educators with a framework for building their own district-level music curriculum.

Wisconsin's Approach to Standards for Music

The work of the writing committee for the *Wisconsin Standards for Music* drew from available models of music standards. With the release of the *Wisconsin Model Academic Standards for Music Education* (1997) and the *National Core Arts Standards in Music* (2014), Wisconsin music teachers have had numerous resources to consult when determining how to build the foundational knowledge and skills of students. These resources, along with several other state standards sets, have been the inspiration for

this standards document. The standards developed are reflective of the artistic processes of the *National Core Arts Standards*. These artistic processes—Create, Perform, Respond, and Connect—provide the main concepts. The performance indicators, at each grade band, expand on what the standard and artistic process is.

Two standards examples, the *Wisconsin's Model Academic Standards for Music Education* (1997), and the *National Core Arts Standards in Music* (2014), have generated a great deal of attention from educators, parents, and the general public. The choice in comparing these two examples is based on two data collections: 1) an informal poll of music educators asking what set of standards they use in the classroom, and 2) a statewide survey of music educators, administrators, parents, music professionals, and the public asking about standards work and music education skills and knowledge they valued for the classroom. Respondents to the public surveys identified these two standards sets as having great value. The need to respect and pull together aspects from both of these was a common theme shared by respondents as well as members of the team developing this document.

For this revision of the *Wisconsin Standards for Music*, two strands have been developed: General and Performance. The purposeful reduction to just two strands is meant to further expand experiential music opportunities. This allows educators to focus learners through both a general engagement of music elements and performance. General Music and Performance Music classes share the same performance indicators in Standards 1 (Create), 3 (Respond), and 4 (Connect). Standard 2 (Perform) provides some delineation in whether a student is performing for a general investigatory experience or with the ultimate goal of performing within an organized performance class. Differentiation begins when organized performance classes (such as band, choir, orchestra, jazz groups, percussion ensembles, and ethnic ensembles) begin, and use the additional performance indicators in Standard 2 of the Performance strand.

The *Wisconsin Standards for Music* may be taught through a variety of classes and experiences. Each district has the opportunity to identify how to implement these standards, and to determine the means by which students will meet these standards. Critical to this work is the continued conversations in school communities with multiple stakeholders to support the implementation of these standards. These conversations are a starting point for determining how to set the stage for high quality, comprehensive music programming throughout Wisconsin's schools.

Resources

The majority of the resources used in developing the *Wisconsin Standards for Music* came from the *Wisconsin Model Academic Standards for Music* (1997) and the *National Core Arts Standards in Music* (2014). The artistic processes of this work are based on the *National Core Arts Standards* © 2015 National Coalition for Core Arts Standards. Rights administered by State Education Agency Directors of Arts Education (SEADAE). (All rights reserved.)

- National Core Arts Standards. 2014. Dover, DE: National Coalition for Core Arts Standards (copyright use).
    - Music Standards Strand (PreK-8)
    - Music - Harmonizing Instruments Strand
    - Music - Composition and Theory Strand
    - Music - Traditional and Emerging Ensembles Strand
    - Music - Music Technology Strand
- Wisconsin Model Academic Standards for Music. 1997. Madison, WI: Wisconsin Department of Public Instruction.

Also considered for comparison were:

- Arizona Music Standards. 2015. Phoenix, AZ: Arizona Department of Education.
- Colorado Music Standards. 2009. Denver, CO: Colorado Department of Education.
- Florida Music Standards. 2010. Tallahassee, FL: Florida Department of Education.
- Maine Visual and Performing—Music Standards. 2007. Augusta, ME: Maine Department of Education.
- Montana Arts Content Standards. 2016.
- Oklahoma State Department of Education—Music Standards. 2013. Oklahoma City, OK: Oklahoma State Department of Education.

Components of the Standards

Here are some things to look for in these standards:

1. The *Wisconsin Standards for Music* focus on the artistic processes of Create, Perform, Respond, and Connect. These are inspired by the *National Core Arts Standards* (2014).

2. The *Wisconsin Standards for Music* are organized by grade bands: K-2, 3-5, 6-8, and 9-12. This allows for some flexibility in instruction and greater differentiation for the support of students over time. All levels identify *proficient* for the older grade level in that band. Supplemental materials providing additional levels, such as those in early childhood and for advanced music levels, are being investigated to support this work at a later time.

3. There are four music standards identified for grades kindergarten through 12. These conceptual ideas take into consideration the current *Wisconsin Model Academic Standards for Music* (1997) and the *National Core Arts Standards* (2014), as well as other state examples available and reviewed by the writing team.

4. The overall concept for the music standards provide **what students should know and be able to do** in the identified grade bands. Performance indicators provide additional ideas to support the standards. The performance indicators allow for flexibility for educators and school communities to identify more specific elements through their own curricular development. This document focuses on the ***what*** (and not the ***how***) a learner will know when they reach the identified performance indicators. This set of standards does not prescribe specific strategies or knowledge sets or music examples, *but rather allows the school community to identify these areas through their own music curriculum plan.*

Music Strands

The two strands differentiated within the standards are defined as General Music and Performance Music. These are defined in the following ways:

- **General Music** indicates those formal courses exploring music in a non-performance setting. These would include standard "general music" classes, theory (including IB and AP), music composition and improvisation, history, harmonizing instruments, music technology, and any other focus in grades kindergarten through 12.

- **Performance Music** identifies formal courses in grade bands 6-8 and 9-12 that have a focus on actual public music performance. These can include any type of performance-based class such as traditional bands, choirs, orchestras, ethnic

ensembles, jazz performance, small ensembles, solo performance (again including IB foci), and other ensembles utilizing instruments and/or vocal combinations in performance.

Both strands investigate the standards of **Create, Perform, Respond,** and **Connect.** Performance Music has four additional performance indicators for grade bands 3-5, 6-8, and 9-12. These indicators provide additional opportunities for students to explore and master formal skills and knowledge in specific performance classes in these grade bands.

Standards Structure

The *Wisconsin Standards for Music* follows a structure similar to all Wisconsin State Standards.

Standards Coding

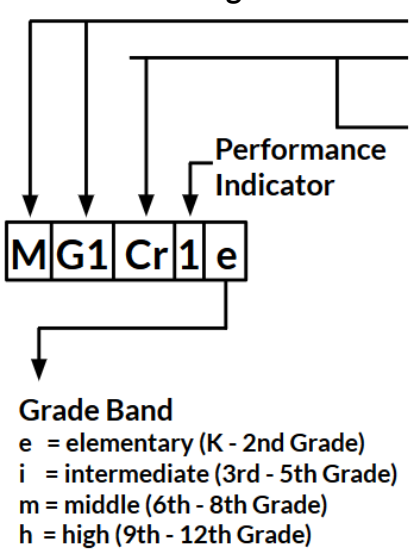

Content Area: General Music (MG)

Standard MG 1: CREATE—Students will generate, develop, and refine artistic work.

Performance Indicators (by Grade Band)

Artistic Process	K-2 (e)	3-5 (i)	6-8 (m)	9-12 (h)
Create	MG1.Cr.1.e: Discover musical ideas through simple rhythm and melodic patterns.	MG1.Cr.5.i: Explore rhythmic, melodic, and harmonic phrases.	MG1.Cr.9.m: Develop musical compositions for voices or instruments.	MG1.Cr.13.h: Design and develop musical compositions for voices or instruments.
	MG1.Cr.2.e: Improvise sounds and movement to accompany artistic play and music by use of voice, instruments, and a variety of sound sources.	MG1.Cr.6.i: Improvise rhythms and melodies with voice, instruments, and a variety of sound sources to add interest to a song.	MG1.Cr.10.m: Improvise rhythmic, melodic, and harmonic variations to embellish a song.	MG1.Cr.14.h: Improvise rhythmic, melodic, and harmonic variations in a variety of genres while following a harmonic progression in a specified style of music.
	MG.1.Cr.3.e: Explore the creation of short pieces using standard or alternative notation.	MG.1.Cr.7.i: Compose short pieces using standard or alternative notation to document personal musical ideas.	MG.1.Cr.11.m: Compose short pieces using standard or alternative notation and technology within specified guidelines, demonstrating the use of the elements of music.	MG.1.Cr.15.h: Compose pieces in a distinct style, using standard or alternative notation and technology, demonstrating creativity in the use of the elements of music for expressive effect.

Standards Formatting

- **Standard**: Broad statement that tells what students are expected to know or be able to do.
- **Artistic Process**: Breaks down the broad statement into manageable learning pieces.
- **Performance Indicator by Grade Band**: Measurable degree to which a standard has been developed or met.

Grade Bands

Grade bands of K-2, 3-5, 6-8, and 9-12 align to elementary, intermediate, middle, and high school levels.

- Grade bands K-2 and 3-5 indicators share knowledge and skills that should be integrated throughout the elementary curriculum.
- Music education should be part of the curriculum for all grade band 6-8 students with opportunities in general music, vocal, and instrumental music. The two strands of general and performance identify skills and knowledge for these areas in middle school.
- Music education at the 9-12 grade band level continues to develop student foundational understandings of music.
- Performance indicators for more in-depth music learning expectations for high school students with aspirations toward careers and postsecondary studies in the music industry are listed within the appendices. They are foundational for all students, and, certainly, many students will display higher levels of proficiency in music performance.

Section III

Discipline: Music Standards

Content Area: General Music (MG)

Standard MG 1: CREATE—Students will generate, develop, and refine artistic work.

Performance Indicators (by Grade Band)

Artistic Process	K-2 (e)	3-5 (i)	6-8 (m)	9-12 (h)
Create	MG1.Cr.1.e: Discover musical ideas through simple rhythm and melodic patterns.	MG1.Cr.5.i: Explore rhythmic, melodic, and harmonic phrases.	MG1.Cr.9.m: Develop musical compositions for voices or instruments.	MG1.Cr.13.h: Design and develop musical compositions for voices or instruments.
	MG1.Cr.2.e: Improvise sounds and movement to accompany artistic play and music by use of voice, instruments, and a variety of sound sources.	MG1.Cr.6.i: Improvise rhythms and melodies with voice, instruments, and a variety of sound sources to add interest to a song.	MG1.Cr.10.m: Improvise rhythmic, melodic, and harmonic variations to embellish a song.	MG1.Cr.14.h: Improvise rhythmic, melodic, and harmonic variations in a variety of genres while following a harmonic progression in a specified style of music.
	MG.1.Cr.3.e: Explore the creation of short pieces using standard or alternative notation.	MG.1.Cr.7.i: Compose short pieces using standard or alternative notation to document personal musical ideas.	MG.1.Cr.11.m: Compose short pieces using standard or alternative notation and technology within specified guidelines, demonstrating the use of the elements of music.	MG.1.Cr.15.h: Compose pieces in a distinct style, using standard or alternative notation and technology, demonstrating creativity in the use of the elements of music for expressive effect.
	MG.1.Cr.4.e: Identify musical ideas through verbal, written, aural, or technological means.	MG.1.Cr.8.i: Identify musical ideas using standard or alternative notation through verbal, written, aural, or technological means.	MG.1.Cr.12.m: Arrange short pieces using standard or alternative notation with symbols or technology means using specified guidelines.	MG.1.Cr.16.h: Arrange short pieces using standard or alternative notation with symbols or technology means using specified guidelines to demonstrate creativity in the elements of music.

Content Area: General Music (MG)

Standard MG 2: PERFORM—Students will analyze, develop, and convey meaning through the presentation of artistic work.

Performance Indicators (by Grade Band)

Artistic Process	K-2 (e)	3-5 (i)	6-8 (m)	9-12 (h)
Perform	MG2.P.1.e: Explore and identify the meaning of a song through its text by singing or playing an instrument.	MG2.P.6.i: Explore and demonstrate an understanding of the elements of music by reading, singing, or playing an instrument.	MG2.P.11.m: Rehearse and demonstrate the ability to sing or play expressively, on pitch, and in rhythm, while using proper technique and maintaining a steady beat.	MG2.P.16.h Rehearse and demonstrate the ability to sing or play expressively, on pitch, in rhythm, and with proper technique and maintaining a steady beat.
	MG2.P.2.e: Discover how to express a piece of music to convey its meaning.	MG2.P.7.i: Demonstrate expressive qualities in performance.	MG2.P.12.m Perform using expressive qualities and techniques.	MG2.P.17.h Perform using expressive qualities and techniques with the composer's intent.
	MG2.P.3.e: Examine and share the performance with class and teacher.	MG2.P.8.i: Critique performances of self and peers.	MG2.P.13.m: Discuss own ideas and feedback of others to develop strategies to address technical challenges.	MG2.P.18.h: Discuss own ideas and feedback of others to develop and implement strategies to address technical challenges.
	MG2.P.4.e: Identify persons serving in the roles of performer and audience.	MG2.P.9.i: Identify the importance of the performer and the audience.	MG2.P.14.m: Illustrate how the setting and elements of music contribute to understanding the context of the music.	MG2.P.19.h: Illustrate how the setting and elements of music contribute to the context and expressive qualities of the music.

NOTE: This standard continued on next page.

Content Area: General Music (MG)

Standard MG 2: PERFORM—Students will analyze, develop, and convey meaning through the presentation of artistic work. (cont'd)

Performance Indicators (by Grade Band)

Artistic Process	K-2 (e)	3-5 (i)	6-8 (m)	9-12 (h)
Perform (con't)	MG2.P.5.e: Explore music through both reading and aural approaches.	MG2.P.10.i: Investigate music from aural traditions and through standard and alternative notation through performance.	MG2.P.15.m: Demonstrate an understanding of music from aural traditions and through standard and alternative notation through performance.	MG2.P.20.h: Interpret and perform music from aural traditions and through standard and alternative notation with stylistic accuracy.

Content Area: General Music (MG)

Standard MG 3: RESPOND—Students will critically interpret intent and meaning in order to evaluate artistic work.

Performance Indicators (by Grade Band)

Artistic Process	K-2 (e)	3-5 (i)	6-8 (m)	9-12 (h)
Respond	MG3.R1.e: Recognize and respond to foundational musical elements.	MG3.R.5.i: Recognize and define grade-appropriate foundational musical elements.	MG3.R.9.m: Define and demonstrate understanding of foundational musical elements in discussion and written reflections.	MG3.R.14.h: Illustrate understanding of contrasts and similarities of expressive elements in artistic work through discussion and written reflections.
	MG3.R.2.e: Express musical ideas through verbal, movement, written, or artistic means.	MG3.R.6.i: Express musical ideas through verbal, movement, written, or artistic means.	MG3.R.10.m: Express musical ideas through verbal, movement, written, artistic, or technological means.	MG3.R.15.h: Express musical ideas through verbal, movement, written, artistic, or technological means.
	MG3.R.3.e: Utilize music terminology in the analysis and evaluation of musical performances, recordings, and compositions.	MG3.R.7.i: Utilize appropriate music terminology in the evaluation and reflection of music performances.	MG3.R.11.m: Evaluate and critique musical performances, recordings, and compositions using appropriate music terminology and technology.	MG3.R.16.h: Analyze, critique, and evaluate musical performances, recordings, and compositions using appropriate music terminology, theory, and technology.
	MG3.R.4.e: Identify proper concert/audience etiquette.	MG3.R.8.i: Demonstrate proper concert and audience etiquette.	MG3.R.12.m: Demonstrate proper concert and audience etiquette for a variety of musical settings.	MG3.R.17.h: Demonstrate proper concert and audience etiquette for a variety of musical settings.

NOTE: This standard continued on next page.

Content Area: General Music (MG)

Standard MG 3: RESPOND—Students will critically interpret intent and meaning in order to evaluate artistic work. (cont'd)

Performance Indicators (by Grade Band)

Artistic Process	K-2 (e)	3-5 (i)	6-8 (m)	9-12 (h)
Respond (cont'd)			MG3.R.13.m: Reflect upon and critique performances using grade-appropriate music vocabulary.	MG3.R.18.h: Reflect upon and critique performances using grade-appropriate music vocabulary.

Content Area: General Music (MG)

Standard MG 4: CONNECT—Students will relate prior knowledge and personal experience with music to cultural and historical context.

Performance Indicators (by Grade Band)

Artistic Process	K-2 (e)	3-5 (i)	6-8 (m)	9-12 (h)
Connect	MG4.Cn.1.e: Explore the historical and cultural aspects of music as it relates to other disciplines and arts.	MG4.Cn.5.i: Compare the historical and cultural aspects of music with other disciplines.	MG4.Cn.9.m: Analyze the historical and cultural relationships between music and other disciplines.	MG4.Cn.13.h: Interpret the historical and cultural relationships between music and other disciplines.
	MG4.Cn.2.e: Express how music relates to self and others.	MG4.Cn.6.i: Explain how music relates to self, others, and the world.	MG4.Cn.10.m: Explain how music relates to self, others, and the world using grade-appropriate music vocabulary.	MG4.Cn.14.h: Explain the relationship between performer and audience using grade-appropriate music vocabulary.
	MG4.Cn.3.e: Explore musical connections, similarities, and differences.	MG4.Cn.7.i: Examine and evaluate musical connections, similarities, and differences.	MG4.Cn.11.m: Categorize musical connections, similarities, and differences.	MG4.Cn.15.h: Analyze connections, similarities, and differences in a musical context.
	MG4.Cn.4.e Share various roles of musicians in their own and other cultures.	MG4.Cn.8.i Describe roles of musicians in various music settings and world cultures.	MG4.Cn.12.m Compare and contrast the roles of musicians in various music settings and world cultures.	MG4.Cn.16.h Identify how the influence of two or more cultural traditions impact the genre and style of a piece of music.

Content Area: Performance Music (MP)

Standard MP 1: CREATE—Students will generate, develop, and refine artistic work.

Performance Indicators (by Grade Band)

Artistic Process	K-2 (e)	3-5 (i)	6-8 (m)	9-12 (h)
Create	MP1.Cr.1.e: Discover musical ideas through simple rhythm and melodic patterns.	MP1.Cr.5.i: Explore rhythmic, melodic, and harmonic phrases.	MP1.Cr.9.m: Develop musical compositions for voices or instruments.	MP1.Cr.13.h: Design and develop musical compositions for voices or instruments.
	MP1.Cr.2.e: Improvise sounds and movement to accompany artistic play and music by use of voice, instruments, and a variety of sound sources.	MP1.Cr.6.i: Improvise rhythms and melodies with voice, instruments, and a variety of sound sources to add interest to a song.	MP1.Cr.10.m: Improvise rhythmic, melodic, and harmonic variations to embellish a song.	MP1.Cr.14.h: Improvise rhythmic, melodic, and harmonic variations in a variety of genres while following a harmonic progression in a specified style of music.
	MP1.Cr.3.e: Explore the creation of short pieces using standard or alternative notation.	MP1.Cr.7.i: Compose short pieces using standard and/or alternative notation to document personal musical ideas.	MP1.Cr.11.m: Compose short pieces using standard and/or alternative notation and technology within specified guidelines, demonstrating the use of the elements of music.	MP1.Cr.15.h: Compose pieces in a distinct style, using standard and/or alternative notation and technology, demonstrating creativity in the use of the elements of music for expressive effect.
	MP1.Cr.4.e: Identify musical ideas through verbal, written, aural, or technological means.	MP1.Cr.8.i: Identify musical ideas using standard or alternative notation through verbal, written, aural, or technological means.	MP1.Cr.12.m: Arrange short pieces using standard or alternative notation with symbols or technology means using specified guidelines.	MP1.Cr.16.h: Arrange short pieces using standard or alternative notation with symbols or technology means using specified guidelines to demonstrate creativity in the elements of music.

Content Area: Performance Music (MP)

Standard MP 2: PERFORM—Students will analyze, develop, and convey meaning through the presentation of artistic work.

Performance Indicators (by Grade Band)

Artistic Process	K-2 (e)	3-5 (i)	6-8 (m)	9-12 (h)
Perform	MP2.P.1.e: Explore and identify the meaning of a song through its text by singing or playing an instrument.	MP2.P.9.i: Explore and demonstrate an understanding of the elements of music by reading, singing or playing an instrument.	MP2.P.17.m: Rehearse and demonstrate the ability to sing or play expressively, on pitch, and in rhythm, while using proper technique and maintaining a steady beat.	MP2.P.25.h Rehearse and demonstrate the ability to sing or play expressively, on pitch, in rhythm, and with proper technique and maintaining a steady beat.
	MP2.P.2.e: Discover how to express a piece of music to convey its meaning.	MP2.P.10.i: Demonstrate expressive qualities in performance.	MP2.P.18.m Perform using expressive qualities and techniques.	MP2.P.26.h Perform using expressive qualities and techniques with the composer's intent.
	MP2.P.3.e: Examine and share the performance with class and teacher.	MP2.P.11.i: Critique performances of self and peers.	MP2.P.19.m: Discuss own ideas and feedback of others to develop strategies to address technical challenges.	MP2.P.27.h: Discuss own ideas and feedback of others to develop and implement strategies to address technical challenges.
	MP2.P.4.e: Identify the persons serving in the roles of performer and audience.	MP2.P.12.i: Identify the importance of the performer and the audience.	MP2.P.20.m: Illustrate how the setting and music elements contribute to the context of the music.	MP2.P.28.h: Illustrate how the setting and music elements contribute to the context and expressive qualities of the music.

NOTE: This standard continued on next page.

Content Area: Performance Music (MP)

Standard MP 2: PERFORM—Students will analyze, develop, and convey meaning through the presentation of artistic work. (cont'd)

Performance Indicators (by Grade Band)

Artistic Process	K-2 (e)	3-5 (i)	6-8 (m)	9-12 (h)
Perform (cont'd)	MP2.P.5.e: Explore music through both reading and aural approaches.	MP2.P.13.i: Investigate music from aural traditions and through standard and nonstandard notation through performance.	MP2.P.21.m: Demonstrate an understanding of music from aural traditions and through standard and nonstandard notation through performance.	MP2.P.29.h: Interpret and perform music from aural traditions and through standard and nonstandard notation with stylistic accuracy.
	MP2.P.6.e: Perform in a classroom setting.	MP2.P.14.i: Perform as a part of an ensemble.	MP2.P22.m: Perform collaboratively, as a part of an ensemble, demonstrating well-developed ensemble skills.	MP2.P.30.h: Demonstrate well-developed ensemble skills while working collaboratively with other performers and the conductor in a rehearsal and performance.
	MP2.P.7.e: Perform in a classroom setting within a small group	MP2.P.15.i: Perform in small ensembles.	MP2.P.24.m: Demonstrate proper concert etiquette collaboratively in a rehearsal for a variety of musical settings.	MP2.P.31.h: Perform solos and in small ensembles, interacting with peers employing performance techniques which enhance the performance.

NOTE: This standard continued on next page.

Content Area: Performance Music (MP)

Standard MP 2: PERFORM—Students will analyze, develop, and convey meaning through the presentation of artistic work. (cont'd)

Performance Indicators (by Grade Band)

Artistic Process	K-2 (e)	3-5 (i)	6-8 (m)	9-12 (h)
	MP2.P.8.e: Practice proper concert etiquette for a variety of musical settings.	MP2.P.16.i: Practice proper concert etiquette for a variety of musical settings.	MP2.P.24.m: Demonstrate proper concert etiquette collaboratively in a rehearsal for a variety of musical settings.	MP2.P.32.h: Demonstrate or model proper concert etiquette for a variety of musical settings as performer and as an audience member.

Content Area: Performance Music (MP)

Standard MP3: RESPOND—Students will critically interpret intent and meaning in order to evaluate artistic work. (cont'd)

Performance Indicators (by Grade Band)

Artistic Process	K-2 (e)	3-5 (i)	6-8 (m)	9-12 (h)
Respond	MP3.R1.e: Recognize and respond to foundational musical elements.	MP3.R.5.i: Recognize and define grade-appropriate foundational musical elements.	MP3.R.9.m: Define and demonstrate understanding of foundational musical elements in discussion and written reflections.	MP3.R.14.h: Illustrate understanding of contrasts and similarities of expressive elements in artistic work through discussion and written reflections.
	MP3.R.2.e: Express musical ideas through verbal, movement, written, or artistic means.	MP3.R.6.i: Express musical ideas through verbal, movement, written, or artistic means.	MP3.R.10.m: Express musical ideas through verbal, movement, written, artistic, or technological means.	MP3.R.15.h: Express musical ideas through verbal, movement, written, artistic, or technological means.
	MP3.R.3.e: Utilize music terminology in the analysis and evaluation of musical performances, recordings, and compositions.	MP3.R.7.i: Utilize appropriate music terminology in the evaluation and reflection of music performances.	MP3.R.11.m: Evaluate and critique musical performances, recordings, and compositions using appropriate music terminology and technology.	MP3.R.16.h: Analyze, critique, and evaluate musical performances, recordings, and compositions using appropriate music terminology, theory, and technology.
	MP3.R.4.e: Identify proper concert and audience etiquette.	MP3.R.8.i: Demonstrate proper concert and audience etiquette.	MP3.R.12.m: Demonstrate proper concert and audience etiquette for a variety of musical settings.	MP3.R.17.h: Demonstrate proper concert and audience etiquette for a variety of musical settings.

NOTE: This standard continued on next page.

Content Area: Performance Music (MP)

Standard MP3: RESPOND—Students will critically interpret intent and meaning in order to evaluate artistic work. (cont'd)

Performance Indicators (by Grade Band)

Artistic Process	K-2 (e)	3-5 (i)	6-8 (m)	9-12 (h)
Respond (cont'd)			MP3.R.13.m: Reflect upon and critique performances using grade-appropriate music vocabulary.	MP3.R.18.h: Reflect upon and critique performances using grade-appropriate music vocabulary.

Content Area: Performance Music (MP)

Standard MP 4: CONNECT—Students will relate prior knowledge and personal experience with music to cultural and historical context.

Performance Indicators (by Grade Band)

Artistic Process	K-2 (e)	3-5 (i)	6-8 (m)	9-12 (h)
Connect	MP4.Cn.1.e: Explore the historical and cultural aspects of music as it relates to other disciplines and arts.	MP4.Cn.5.i: Compare the historical and cultural aspects of music with-other disciplines.	MP4.Cn.9.m: Analyze the historical and cultural relationships of music's interactions with other disciplines.	MP4.Cn.13.h: Interpret the historical and cultural relationships between music and other disciplines.
	MP4.Cn.2.e: Express how music relates to self and others.	MP4.Cn.6.i: Explain how music relates to self, others, and the world.	MP4.Cn.10.m: Explain how music relates to self, others, and the world using grade-appropriate music vocabulary.	MP4.Cn.14.h: Explain the relationship between performer and audience using grade-appropriate music vocabulary.
	MP4.Cn.3.e: Explore musical connections, similarities, and differences.	MP4.Cn.7.i: Examine and evaluate musical connections, similarities, and differences.	MP4.Cn.11.m: Categorize musical connections, similarities, and differences.	MP4.Cn.15.h: Analyze connections, similarities, and differences in a musical context.
	MP4.Cn.4.e Share various roles of musicians in their own and other cultures.	MP4.Cn.8.i Describe roles of musicians in various music settings and world cultures.	MP4.Cn.12.m Compare and contrast the roles of musicians in various music settings and world cultures.	MP4.Cn.16.h Identify how the influence of two or more cultural traditions impact the genre and style of a piece of music.