WISCONSIN STANDARDS FOR

Theatre Education

Wisconsin Department of Public Instruction

WISCONSIN STANDARDS FOR
Theatre

Wisconsin Department of Public Instruction
Tony Evers, PhD, State Superintendent
Madison, Wisconsin

This publication is available from:

Wisconsin Department of Public Instruction
125 South Webster Street
Madison, WI 53703
(608) 266-8960
https://dpi.wi.gov/fine-arts/theatre

December 2018 Wisconsin Department of Public Instruction

The Wisconsin Department of Public Instruction does not discriminate on the basis of sex, race, color, religion, creed, age, national origin, ancestry, pregnancy, marital status or parental status, sexual orientation; or ability and provides equal access to the Boy Scouts of America and other designated youth groups.

Table of Contents

Foreword ..... **iv**
Acknowledgements v

Section I: Wisconsin's Approach to Academic Standards **1**
Purpose of the Document 2
What Are the Academic Standards? 3
Relating the Academic Standards to All Students 4
Ensuring a Process for Student Success 5
References 6

Section II: Wisconsin Standards for Theatre **7**
Theatre Education in Wisconsin 8
Standards Conceptual Focus 9
Wisconsin's Approach to Standards for Theatre 10
Resources 11
Components of the Standards 12
Theatre Performance and Theatre Production 13
Standards Structure 14

Section III: Discipline: Theatre Standards **16**
Wisconsin Standards for Theatre, Performance Strand 19
Wisconsin Standards for Theatre, Production Strand 24

Foreword

On December 10, 2018, I formally adopted the *Wisconsin Standards for Theatre*. This new set of academic standards provides a foundational framework that identifies what students should know and be able to do in the area of theatre education.

The adoption of the *Wisconsin Standards for Theatre* was part of a concerted effort led by Wisconsin educators and stakeholders who shared their expertise in theatre performance and production areas, teaching from kindergarten through higher education, and in professional work. The public and legislature provided feedback for the writing committee to consider as part of Wisconsin's Academic Standards review and revision process.

Theatre is an essential learning opportunity in PK-12 education for all students. The knowledge, skills, and techniques gained through the theatre education programming across the state supports the overall goal of helping all students to become college and career ready.

The new standards introduce two strands—Performance and Production. Each strand provides a foundation for two important aspects of theatre. Both strands support building a student's knowledge and skills using four artistic processes: Create, Perform, Respond, and Connect. The framework highlights a foundational set of knowledge and skills with actionable indicators for theatre classroom experiences.

The *Wisconsin Standards for Theatre* is practical, relevant, and conceptual in nature. It allows school districts to tailor the instructional practices and resources required to support students' demonstration of what they should know and be able to do in theatre throughout their school career. The Wisconsin Department of Public Instruction will continue to build upon this work through the addition of resources for the field. I am excited to share the *Wisconsin Standards for Theatre*, which aims to build both performance and production theatre knowledge, skills, and engagement opportunities for all of our students.

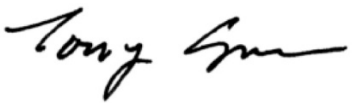

Tony Evers, PhD

Acknowledgements

The Wisconsin Department of Public Instruction (DPI) wishes to acknowledge the ongoing work, commitment, and various contributions of individuals to revise our state's academic standards for theatre. Thank you to the State Superintendent's Standards Review Council for their work and guidance through the standards process. A special thanks to the Theatre Writing Committee for taking on this important project that will shape the classrooms of today and tomorrow. Thanks to the many staff members across the division and other teams at DPI who have contributed their time and talent to this project. Finally, a special thanks to Wisconsin educators, businesspeople, parents, and citizens who provided comment and feedback to drafts of these standards.

Wisconsin Standards for Theatre Writing Team

Co-Chairs: **Sara J. Danke Lukaszewicz**, Wisconsin Rapids Public Schools
Kristi Ross-Clausen, Former K-12 / University of Wisconsin–Madison, Appleton, WI

DPI Liaisons: **Julie Palkowski**, Arts and Creativity Education Consultant

Laura Ellen Anderle
Nicolet High School

Jennifer Chapman
UW–Eau Claire

Nancy Herbison
Tomahawk High School

Joshua Jackson
Sherman Multicultural Arts School

Adam Jacobi
Wisconsin High School Forensic Association

Gary Olsen
UW–Stevens Point

Ron Parker
Appleton North High School, Renaissance School

Amy Tubbs
Pulaski High School

David Valdes
Theatre Educator and Consultant

Department of Public Instruction, Academic Standards

- John W. Johnson, Director, Literacy and Mathematics, and Director for Academic Standards
- Meri Annin, Lead Visual Communications Designer
- Marci Glaus, Strategic Communications Consultant
- David McHugh, Strategic Planning and Professional Learning Consultant

Department of Public Instruction Leaders

- Sheila Briggs, Assistant State Superintendent, Division of Academic Excellence
- Tamara Mouw, Director, Teaching and Learning
- Scott Jones, Chief of Staff, Office of the State Superintendent

Section I

Wisconsin's Approach to Academic Standards

Purpose of the Document

The purpose of this guide is to improve theatre education for students and for communities. The Wisconsin Department of Public Instruction (DPI) has developed standards to assist Wisconsin educators and stakeholders in understanding, developing, and implementing theatre course offerings and curriculum in school districts across Wisconsin.

This publication provides a vision for student success and follows *The Guiding Principles for Teaching and Learning (2011)*. In brief, the principles are:

1. Every student has the right to learn.
2. Instruction must be rigorous and relevant.
3. Purposeful assessment drives instruction and affects learning.
4. Learning is a collaborative responsibility.
5. Students bring strengths and experiences to learning.
6. Responsive environments engage learners.

Program leaders will find the guide valuable for making decisions about:

- Program structure and integration
- Curriculum redesign
- Staffing and staff development
- Scheduling and student grouping
- Facility organization
- Learning spaces and materials development
- Resource allocation and accountability
- Collaborative work with other units of the school, district, and community

What Are the Academic Standards?

Wisconsin Academic Standards specify what students should know and be able to do in the classroom. They serve as goals for teaching and learning. Setting high standards enables students, parents, educators, and citizens to know what students should have learned at a given point in time. In Wisconsin, all state standards serve as a model. Locally elected school boards adopt academic standards in each subject area to best serve their local communities. We must ensure that all children have equal access to high-quality education programs. Clear statements about what students must know and be able to do are essential in making sure our schools offer opportunities to get the knowledge and skills necessary for success beyond the classroom.

Adopting these standards is voluntary. Districts may use the academic standards as guides for developing local grade-by-grade level curriculum. Implementing standards may require some school districts to upgrade school and district curriculums. This may result in changes in instructional methods and materials, local assessments, and professional development opportunities for the teaching and administrative staff.

What is the Difference Between Academic Standards and Curriculum?

Standards are statements about what students should know and be able to do, what they might be asked to do to give evidence of learning, and how well they should be expected to know or do it. Curriculum is the program devised by local school districts used to prepare students to meet standards. It consists of activities and lessons at each grade level, instructional materials, and various instructional techniques. In short, standards define what is to be learned at certain points in time, and from a broad perspective, what performances will be accepted as evidence that the learning has occurred. Curriculum specifies the details of the day-to-day schooling at the local level.

Developing the Academic Standards

DPI has a transparent and comprehensive process for reviewing and revising academic standards. The process begins with a notice of intent to review an academic area with a public comment period. The State Superintendent's Standards Review Council examines those comments and may recommend revision or development of standards in that academic area. The state superintendent authorizes whether or not to pursue a revision or development process. Following this, a state writing committee is formed to work on those standards for all grade levels. That draft is then made available for open review to get feedback from the public, key stakeholders, educators, and the Legislature with further review by the State Superintendent's Standards Review Council. The state superintendent then determines adoption of the standards.

Aligning for Student Success

To build and sustain schools that support every student in achieving success, educators must work together with families, community members, and business partners to connect the most promising practices in the most meaningful contexts. The release of the *Wisconsin Standards for Theatre* provides a set of important academic standards for school districts to implement. This is connected to a larger vision of every child graduating college and career ready. The graphic below illustrates the relationship between academic standards and other critical principles and efforts that function together to educate every child to graduate college and career ready. Here, the vision and set of Guiding Principles form the foundation for building a supportive process for teaching and learning rigorous and relevant content. The following sections articulate this integrated approach to increasing student success in Wisconsin schools and communities.

Relating the Academic Standards to All Students

Grade-level standards should allow ALL students to engage, access, and be assessed in ways that fit their strengths, needs, and interests. This applies to the achievement of students with IEPs (individualized education plans), English learners, and gifted and talented pupils, consistent with all other students. Academic standards serve as the foundation for individualized programming decisions for all students.

Academic standards serve as a valuable basis for establishing concrete, meaningful goals as part of each student's developmental progress and demonstration of proficiency. Students with IEPs must be provided specially designed instruction that meets their individual needs. It is expected that each individual student with an IEP will require unique services and supports matched to their strengths and needs in order to close achievement gaps in grade-level standards. Alternate standards are only available for students with the most significant cognitive disabilities.

Gifted and talented students may achieve well beyond the academic standards and move into advanced grade levels or into advanced coursework.

Our Vision: Every Child a Graduate, College and Career Ready

We are committed to ensuring every child graduates from high school academically prepared and socially and emotionally competent. A successful Wisconsin student is proficient in academic content and can apply their knowledge through skills such as critical thinking, communication, collaboration, and creativity. The successful student will also possess critical habits such as perseverance, responsibility, adaptability, and leadership. This vision for every child as a college and career ready graduate guides our beliefs and approaches to education in Wisconsin.

Guided by Principles

All educational initiatives are guided and impacted by important and often unstated attitudes or principles for teaching and learning. *The Guiding Principles for Teaching and Learning (2011)* emerge from research and provide the touchstone for practices that truly affect the vision of Every Child a Graduate Prepared for College and Career. When made transparent, these principles inform what happens in the classroom, direct the implementation and evaluation of programs, and most importantly, remind us of our own beliefs and expectations for students.

Ensuring a Process for Student Success

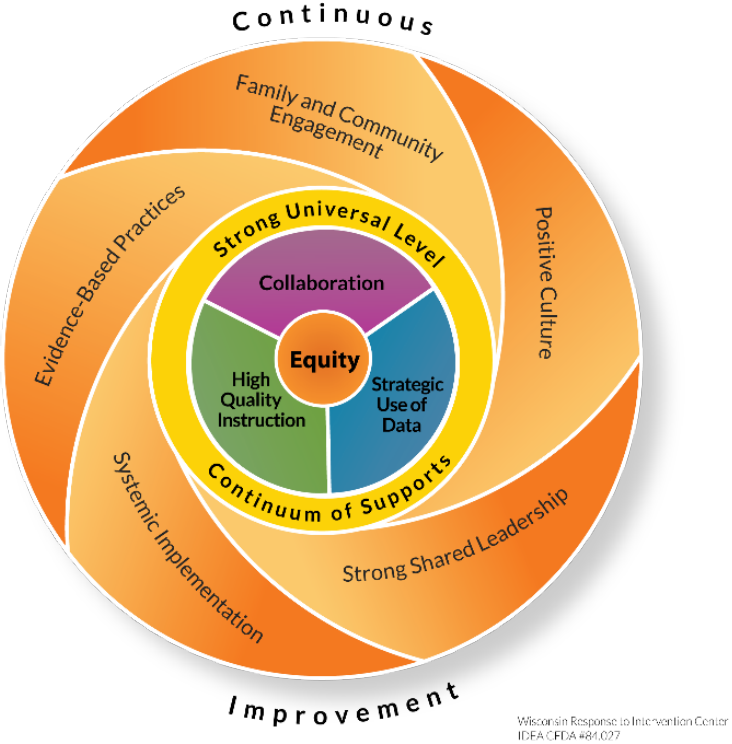

For Wisconsin schools and districts, implementing the *Framework for Equitable Multi-Level Systems of Supports (2017)* means providing equitable services, practices, and resources to every learner based upon responsiveness to effective instruction and intervention. In this system, high-quality instruction, strategic use of data, and collaboration interact within a continuum of supports to facilitate learner success. Schools provide varying types of supports with differing levels of intensity to proactively and responsibly adjust to the needs of the whole child. These include the knowledge, skills, and habits learners need for success beyond high school, including developmental, academic, behavioral, social, and emotional skills.

Connecting to Content: Wisconsin Academic Standards

Within this vision for increased student success, rigorous, internationally benchmarked academic standards provide the content for high-quality curriculum and instruction and for a strategic assessment system aligned to those standards. With the adoption of the standards, Wisconsin has the tools to design curriculum, instruction, and assessments to maximize student learning. The standards articulate what we teach so that educators can focus on how instruction can best meet the needs of each student. When implemented within an equitable multi-level system of support, the standards can help to ensure that every child will graduate college and career ready.

References

The Guiding Principles for Teaching and Learning. 2011. Madison, WI: Wisconsin Department of Public Instruction. Retrieved from https://dpi.wi.gov/standards/guiding-principles.

Framework for Equitable Multi-Level Systems of Supports. 2017. Madison, WI: Wisconsin Department of Public Instruction. Retrieved from https://dpi.wi.gov/rti.

Section II

Wisconsin Standards for Theatre

Theatre Education in Wisconsin

Theatre is part of a comprehensive public school education in Wisconsin. The overall focus of theatre is to build students' skills and knowledge through experiential theatrical activities. Four processes supporting student development involve the artistic areas of theatre education: **Create**, **Perform**, **Respond**, and **Connect.** Each of these processes provides students with foundational opportunities to investigate the arts through an inquiry-based lens. The artistic areas encourage students to be creative and innovative in their theatrical pursuits, to articulate through words and performance, and to identify aspects of theatre across time and cultures. This continuum of learning supports our students by fostering their curious, reflective, and thoughtful nature and supporting their citizenry skills through individual and ensemble work. These artistic processes and activities aim to provide a foundational set of skills and knowledge for students to make them college and career ready.

The 2018 *Wisconsin Standards for Theatre* provide a condensed set of academic standards for schools to use in developing their own curriculum and extra or co-curricular activities. School districts have the opportunity to identify the standards that support their school community's needs. In Wisconsin, a wide variety of theatre education programs is available to students. This document offers a voluntary single set of standards to guide and prepare students to be college and career ready in all school settings, including traditional, Advanced Placement (AP), International Baccalaureate (IB), Montessori, and other models. School communities have the opportunity to tailor and expand these areas through their own curriculum work.

Wisconsin's Vision for Theatre Education

The Wisconsin vision for theatre education is shaped by Wisconsin educators, experts, and theatre industry professionals. This is informed by work done at the national level and by other states. The goal of Wisconsin's vision for theatre education is to introduce the analytical elements and aesthetic expressive qualities of theatre to all students. Wisconsin's vision for K-12th grade theatre is to:

1. Introduce fundamental concepts and aesthetic aspects of theatre to all students, beginning in the elementary school levels
2. Present theatre at the secondary level that expands exploration through more performance and production opportunities
3. Offer additional secondary-level theatre experiences that will allow interested students to study theatre in depth and prepare them for entry into a career or college
4. Demonstrate how theatrical skills directly relate to and can contribute to success in a variety of career paths

5. Offer opportunities for students to demonstrate their theatrical knowledge and skills through artistic processes of: Create, Perform, Respond, and Connect
6. Increase knowledge of theatre for all students through investigating various aspects of theatre across time and cultures

Standards Conceptual Focus

Theatre standards support a conceptual framework allowing for theatre professionals and school communities to add more curricular details of the types of resources, materials, and specific activities for students to engage in. The conceptual artistic processes of Create, Perform, Respond, and Connect weave through all of the grade bands in this standards set. The continuity of this guide allows a sequential progression of skills for students to build upon from kindergarten through 12th grade. The overall expectations for each grade band highlight the goals for all students in each level. Supplemental resources will be added later. Please consider what resources might be helpful to you in your practice supporting the theatrical knowledge and skills of our Wisconsin students (for example, work is in progress to create a resource that aligns the *Wisconsin Early Childhood Learning Standards* with this set of theatre standards.)

The writing team's goal is to create a set of theatre standards that are useful in building the capacity of *all* learners in Wisconsin. In addition, the tool highlights essential skills and knowledge educators and school communities can use to shape a comprehensive theatre education for all students. The intent of the work presented here is to provide theatre educators with a framework for building their own district-level theatre curriculum.

Wisconsin's Approach to Standards for Theatre

The work of the writing committee for this draft of *Wisconsin Standards for Theatre* drew from available models of theatre standards. With the release of the *Wisconsin Model Academic Standards for Theatre Education* (1997) and the *National Core Arts Standards in Theatre* (2014), Wisconsin theatre teachers have had numerous resources to review when determining how to build the foundational knowledge and skills of students. These resources, along with several other state standards sets, have been the inspiration for this standards document. The standards developed are reflective of the artistic processes of the *National Core Arts Standards.* These artistic processes—Create, Perform, Respond, and Connect—provide the main concepts. The performance indicators, at each grade band, expand on the standard and artistic process.

Two standards examples, the *Wisconsin's Model Academic Standards for Theatre Education* (1997) and the *National Core Arts Standards in Theatre* (2014), have generated a great deal of attention from educators, parents, and the general public. A

comparison of these two examples, with standards from two other states is available online—Comparison of Theatre Academic Standards. These two data collections informed the 2018 standards along with: 1) an informal poll of Wisconsin theatre educators about what standards they use; and 2) a statewide survey of educators, administrators, parents, theatre professionals, and the public about standards, skills and knowledge they valued in theatre education. Respondents to the public surveys identified the Wisconsin 1997 and the NCAS as having great value. The need to respect and pull together aspects from both of these was a common theme shared by respondents as well as members of the team developing this document.

This 2018 revision of the *Wisconsin Standards for Theatre* focuses on two areas: Performance and Production. Both are the foundation of theatre education, providing learners with knowledge and skills that aim to build capacity in performance and production. These two strands of theatre expand experiential theatre opportunities. The choice to highlight both Theatre Performance and Theatre Production strands through each of the four standards is intentional. The writing team and field feedback overwhelmingly supported the focus on both strands to offer a more accurate view of theatre. The *Wisconsin Standards for Theatre* have adapted, with permission, the *National Core Arts Standards*' artistic processes: Standard 1 (Create), Standard 2 (Perform), Standards 3 (Respond), and Standard 4 (Connect).

The *Wisconsin Standards for Theatre* may be taught through a variety of classes and experiences. Each district has the opportunity to identify how to implement these standards, and to determine the means by which students will meet these standards. The team has been mindful of keeping performance indicators flexible for use in and outside the classroom to cultivate understanding of process and product. Critical to this work are the continued conversations in school communities with multiple stakeholders to support the implementation of these standards. These conversations are a starting point for determining how to set the stage for high quality, comprehensive theatre programming throughout Wisconsin's schools.

Resources

The majority of the resources used in developing the *Wisconsin Standards for Theatre* came from the *Wisconsin Model Academic Standards for Theatre* (1997) and the *National Core Arts Standards in Theatre* (2014). The artistic processes of this work are based on the *National Core Arts Standards* © 2015. Rights administered by State Education Agency Directors of Arts Education (SEADAE) (All rights reserved).

- National Core Arts Standards and NCAS Theatre. 2014. Dover, DE: National Coalition for Core Arts Standards. (copyright use).
- Wisconsin Model Academic Standards for Theatre. 1997. Madison, WI: Wisconsin Department of Public Instruction.

Also considered for comparison were:

- Arizona Theatre Standards. 2015. Phoenix, AZ: Arizona Department of Education.
- Colorado Drama and Theatre Arts Standards. 2009. Denver, CO: Colorado Department of Education.
- International Baccalaureate for Theatre.

Components of the Standards

Here are elements of this tool to look for:

1. The *Wisconsin Standards for Theatre* focus on the artistic processes of Create, Perform, Respond, and Connect through two strands—Performance and Production. The standards are inspired by the *National Core Arts Standards* (2014).

CREATE Students will generate, develop, and refine artistic work.		**RESPOND** Students will critically interpret intent and meaning in order to evaluate artistic work.	
Performance	**Production**	**Performance**	**Production**
1. Characterization 2. Improvisation 3. Text/Script 4. Direction 5. Collaboration	1. Design 2. Text/Script 3. Management Plan 4. Collaboration	1. Analysis 2. Reflection 3. View Performance	1. Analysis 2. Reflection 3. View Performance
PERFORM Students will analyze, develop, and convey meaning through the presentation of artistic work.		**CONNECT** Students will relate prior knowledge and personal experience with dance to cultural and historical context.	
Performance	**Production**	**Performance**	**Production**
1. Oral Communication 2. Nonverbal Communication 3. Use of Space 4. Public Presentation 5. Protocol	1. Design Execution 2. Tools and Technology Use 3. Design and Management 4. Documentation 5. Public Presentation 6. Protocol	1. Cultural Social Context 2. Research 3. Career Connections 4. Cross Disciplinary	1. Cultural Social Context 2. Research 3. Career Connections 4. Cross Disciplinary

2. The *Wisconsin Standards for Theatre* are organized by grade bands: K-2, 3-5, 6-8, and 9-12. This allows for some flexibility in instruction and greater differentiation for the support of students over time. All levels identify proficient for the older grade level in that band. Supplemental materials providing additional levels, such as those in early childhood and for advanced theatre levels, are being investigated.
3. There are four theatre standards identified for grades kindergarten through 12. These conceptual ideas take into consideration the current *Wisconsin Model Academic Standards for Theatre* (1997) and the *National Core Arts Standards* (2014), as well as other state examples available and reviewed by the writing team.
4. The overall concept for the theatre standards provide **what students should know and be able to do** in the identified grade bands. Performance indicators provide student learning expectations to support the standards. The performance indicators allow for flexibility for educators and school communities to identify more specific elements through their own curricular development. This document focuses on the **what** (and not the **how**) a learner will know when they reach the identified performance indicators. This set of standards does not prescribe specific strategies, knowledge sets, or theatre examples, but rather allows the school community to identify these areas through their own theatre curriculum plan.

Theatre Performance and Theater Production

The writing team reviewed both performance and production areas of theatre through each of the standards areas of Create, Perform, Respond, and Connect. The team has created performance indicators for each of these two strands, Theatre Performance and Theatre Production, to support the depth and breadth of knowledge and skills of both on-stage and behind-the-scenes activities for theatre. These strands are defined as:

- **Theatre Performance**—includes activities such as acting, directing, and script writing.
- **Theatre Production—**includes activities such as technical design, execution, and management.

Standards Structure

The *Wisconsin Standards for Theatre* follow a structure similar to that of to all Wisconsin State Standards.

Standards Coding

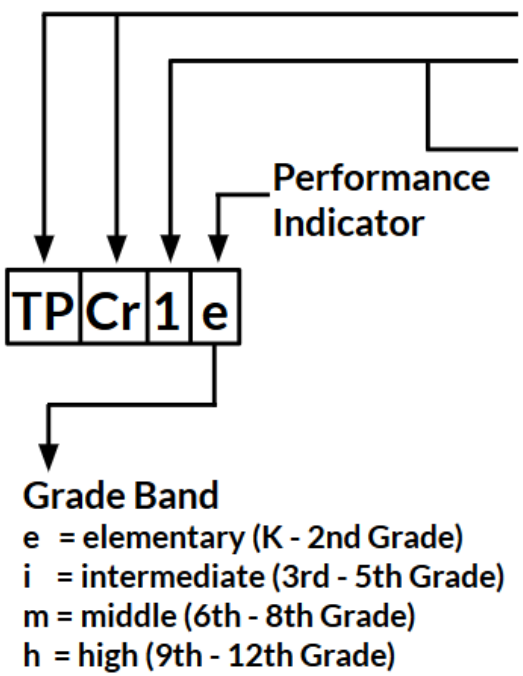

Content Area: Theatre Performance (TP)

Standard TP 1: CREATE—Students will generate, develop, and refine artistic work.

Performance Indicators (by Grade Band)

Artistic Process	K-2 (e)	3-5 (i)	6-8 (m)
Create	TP.Cr.1.e: Characterization Portray feelings of a known or imagined character.	TP.Cr.6.i: Characterization Use written or improvised dialogue to portray feelings and movement of a character in a known or imagined story.	TP.Cr.11.m: Characterization Interpret dialogue or a script using authentic actions.
	TP.Cr.2.e: Improvisation Play imaginatively within a scenario.	TP.Cr.7.i: Improvisation Play a character in a story through improvisation.	TP.Cr.12.m: Improvisation Develop improvised plot with a predefined setting and characters.
	TP.Cr.3.e: Text/Script Tell a story to a teacher or a peer using known or imagined dialogue.	TP.Cr.8.i: Text/Script Create a scenario for two characters based on an existing or imagined story.	TP.Cr.13.m: Text/Script Create a script or adapt an existing work for three or more characters based on a theme, image, or concept.

Standards Formatting

- **Standard**: Broad statement that tells what students are expected to know or be able to do.
- **Artistic Process**: Breaks down the broad statement into manageable learning pieces.
- **Performance Indicator by Grade Band**: Measurable degree to which a standard has been developed or met.

Grade Bands

Grade bands of K-2, 3-5, 6-8, and 9-12 align to elementary, intermediate, middle, and high school levels.

- Grade bands K-2 and 3-5 indicators share knowledge and skills that should be integrated throughout the elementary curriculum.
- Theatre education should be part of the curriculum for all grade band 6-8 students with opportunities in performance and production.
- Theatre education at the 9-12 grade band level continues to develop student foundational understandings of theatre.
- Performance indicators for more in-depth theatre learning expectations for high school students with aspirations toward careers and postsecondary studies in the theatre industry are listed within the appendices. They are foundational for all students, and, certainly, many students will display higher levels of proficiency in theatre performance.

Section III

Discipline: Theatre Standards

Content Area: Theatre Performance (TP)

Standard TP 1: CREATE—Students will generate, develop, and refine artistic work.

Performance Indicators (by Grade Band)

Artistic Process	K-2 (e)	3-5 (i)	6-8 (m)	9-12 (h)
Create	TP.Cr.1.e: Characterization Portray feelings of a known or imagined character.	TP.Cr.6.i: Characterization Use written or improvised dialogue to portray feelings and movement of a character in a known or imagined story.	TP.Cr.11.m: Characterization Interpret dialogue or a script using authentic actions.	TP.Cr.16.h: Characterization Create vivid, complex, and well-rounded characters that authentically represent the text with defined action.
	TP.Cr.2.e: Improvisation Play imaginatively within a scenario.	TP.Cr.7.i: Improvisation Play a character in a story through improvisation.	TP.Cr.12.m: Improvisation Develop improvised plot with a predefined setting and characters.	TP.Cr.17.h: Improvisation Develop improvised concepts, including setting, characters, and situation.
	TP.Cr.3.e: Text/Script Tell a story to a teacher or a peer using known or imagined dialogue.	TP.Cr.8.i: Text/Script Create a scenario for two characters based on an existing or imagined story.	TP.Cr.13.m: Text/Script Create a script or adapt an existing work for three or more characters based on a theme, image, or concept.	TP.Cr.18.h: Text/Script Devise an original or adapt an existing work that incorporates dramatic structure.
	TP.Cr.4.e: Direction Listen to and follow direction given by a teacher or a student leader.	TP.Cr.9.i: Direction Plan staging within a small group setting while utilizing stage vocabulary.	TP.Cr.14.m: Direction Formulate a vision that incorporates purposeful blocking and stage elements.	TP.Cr.19.h: Direction Formulate a directorial vision for the text or script as evidenced by an artistic statement or program note
	TP.Cr.5.e: Collaboration Contribute ideas and make decisions as a group to advance a story.	TP.Cr.10.i: Collaboration Execute a defined role within an ensemble.	TP.Cr.15.m: Collaboration Share leadership and responsibilities to plan a production.	TP.Cr.20.h: Collaboration Collaborate as a creative team with specified roles to make artistic, interpretive choices in a devised or scripted work.

Content Area: Theatre Performance (TP)

Standard TP 2: PERFORM—Students will analyze, develop, and convey meaning through the presentation of artistic work.

Performance Indicators (by Grade Band)

Artistic Process	K-2 (e)	3-5 (i)	6-8 (m)	9-12 (h)
Perform	TP.P.1.e: Oral Communication Use vocalizations and spoken language to communicate.	TP.P.6.i: Oral Communication Explore vocal choices to support an improvised or scripted work.	TP.P.11.m: Oral Communication Produce truthful, authentic vocal choices based on an interpretation of text.	TP.P.16.h: Oral Communication Create truthful, authentic vocal choices based on an internal, emotional interpretation of text.
	TP.P.2.e: Nonverbal Communication Use gestures, movement, and facial expressions to communicate.	TP.P.7.i: Nonverbal Communication Use gestures, facial expressions, and movement to develop a character in an improvised or scripted work.	TP.P.12.m: Nonverbal Communication Create a tableau depicting stories relating to emotional expression.	TP.P.17.h: Nonverbal Communication Demonstrate a character's inner life by utilizing techniques of physical expression and movement to convey subtext.
	TP.P.3.e: Spatial Awareness Use objects in an imaginative manner.	TP.P.8.i: Spatial Awareness Use a hand prop or set piece appropriate to the character while being mindful of the stage environment.	TP.P.13.m: Spatial Awareness Use a hand prop or set piece appropriate to the character with purposeful action within the stage environment.	TP.P.18.h: Spatial Awareness Demonstrate effective purposeful character action, interactions with others, and prop or set use within the stage environment.

NOTE: This standard continued on next page.

Content Area: Theatre Performance (TP)

Standard TP 2: PERFORM—Students will analyze, develop, and convey meaning through the presentation of artistic work. (cont'd)

Performance Indicators (by Grade Band)

Artistic Process	K-2 (e)	3-5 (i)	6-8 (m)	9-12 (h)
Perform (cont'd)	TP.P.4.e: Public Presentation Portray a character for a classroom presentation.	TP.P.9.i: Public Presentation Recite the text or script in classroom presentation.	TP.P.14.m: Public Presentation Recite a memorized text, script, or scene in a performance.	TP.P.19.h: Public Presentation Perform memorized text, script, or scene that includes blocking and related expressive techniques.
	TP.P.5.e: Protocol Exercise developmentally appropriate stage etiquette for school or public performances.	TP.P.10.i: Protocol Exercise developmentally appropriate stage etiquette for school or public performances.	TP.P.15.m: Protocol Exhibit developmentally appropriate stage etiquette for public performances; adhere to copyright laws, including rights, royalties, and recording.	TP.P.20.h: Protocol Exhibit developmentally appropriate stage etiquette for public performances; adhere to copyright laws, including rights, royalties, and recording.

Content Area: Theatre Performance (TP)

Standard TP 3: RESPOND—Students will critically interpret intent and meaning in order to evaluate artistic work.

Performance Indicators (by Grade Band)

Artistic Process	K-2 (e)	3-5 (i)	6-8 (m)	9-12 (h)
Respond	TP.R.1.e: Analysis Respond to a theatrical work by sharing what is seen, heard, and/or felt.	TP.R.4.i: Analysis Identify separate elements in a theatrical work such as characters, plot, and performance elements.	TP.R.7.m: Analysis Express preferences for effectiveness of theatrical performance choices (what works and what does not work).	TP.R.10.h: Analysis Critically analyze the effectiveness of character choices for a theatrical production.
	TP.R.2.e: Reflection Assess personal participation in a performance.	TP.R.5.i: Reflection Assess personal participation in a performance with examples from experiences.	TP.R.8.m: Reflection Assess personal participation in a production through critique using theatre vocabulary.	TP.R.11.h: Reflection Assess personal participation in a production through constructive critique using precise theatre vocabulary.
	TP.R.3.e: View Performance Demonstrate developmentally appropriate audience etiquette.	TP.R.6.i: View Performance Demonstrate developmentally appropriate audience etiquette.	TP.R.9.m: View Performance Demonstrate developmentally appropriate audience etiquette.	TP.R.12.h: View Performance Demonstrate developmentally appropriate audience etiquette at a professional performance.

Content Area: Theatre Performance (TP)

Standard TP 4: CONNECT—Students will relate prior knowledge and personal experience with theatre to cultural and historical contexts.

Performance Indicators (by Grade Band)

Artistic Process	K-2 (e)	3-5 (i)	6-8 (m)	9-12 (h)
Connect	TP.Cn.1.e: Cultural Social Context Express how theatre relates to self and others.	TP.Cn.5.i: Cultural Social Context Explain how theatre relates to self, others, and the world.	TP.Cn.9.m: Cultural Social Context Examine how theatre relates to self, others, and the world in the past and present.	TP.Cn.13.h: Cultural Social Context Compare and contrast how two or more cultural or historical traditions impact production, text, or script.
	TP.Cn.2.e: Research Identify parts of a story (characters, setting, and plot).	TP.Cn.6.i: Research Identify the "given circumstances," environmental and situational conditions that influence a theatrical work.	TP.Cn.10.m: Research Describe the "given circumstances," environmental and situational conditions that influence a theatrical work.	TP.Cn.14.h: Research Explain performance choices based on the "given circumstances," environmental and situational conditions of a theatrical work.
	TP.Cn.3.e: Career Connections Identify a profession in theatre.	TP.Cn.7.i: Career Connections Describe a profession in theatre.	TP.Cn.11.m: Career Connections Explore and differentiate theatre professions.	TP.Cn.15.h: Career Connections Explain what knowledge or training is required for theatre careers, and how theatrical skills translate to other fields.
	TP.Cn.4.e: Cross Disciplinary Describe how theatre connects to art and music.	TP.Cn.8.i: Cross Disciplinary Identify how theatre connects to literature and social studies.	TP.Cn.12.m: Cross Disciplinary Analyze historical and cultural relationships between theatre and other disciplines.	TP.Cn.16.h: Cross Disciplinary Evaluate the historical and cultural relationships between theatre and other disciplines and how it can impact society.

Content Area: Theatre Production (TD)

Standard TD 1: CREATE—Students will generate, develop, and refine artistic work.

Performance Indicators (by Grade Band)

Artistic Process	K-2 (e)	3-5 (i)	6-8 (m)	9-12 (h)
Create	TD.Cr.1.e: Design Assemble, draw, or describe a character's costume for a story.	TD.Cr.5.i: Design Assemble, draw, or describe multiple ideas for costumes, props, and/or scenery used for a story.	TD.Cr.9.m: Design Create a selection of documents or artifacts depicting some design elements of a production.	TD.Cr.13.h: Design Create a selection of documents or artifacts for three or more design elements for a production.
	TD.Cr.2.e: Text/Script Tell a story to a teacher or a peer that includes ideas for production elements.	TD.Cr.6.i: Text/Script Create a scenario for an existing or imagined story that includes production elements.	TD.Cr.10.m: Text/Script Outline required major production elements based on a script.	TD.Cr.14.h: Text/Script Devise required major production and management elements of a script that support a directorial concept.
	TD.Cr.3.e: Management Plan Watch a live or recorded production and identify responsibilities of some of those involved in creating the work.	TD.Cr.7.i: Management Plan Read a script or watch a live or recorded production and list responsibilities of executing a show.	TD.Cr.11.m: Management Plan Read a script or watch a live or recorded production and describe sequence of steps in the process required to execute that show.	TD.Cr.15.h: Management Plan Create a timeline for executing production elements for a hypothetical or realized show.
	TD.Cr.4.e: Collaboration Contribute ideas and make decisions as a group to advance a story.	TD.Cr.8.i: Collaboration Execute a defined role within an ensemble.	TD.Cr.12.m: Collaboration Share leadership and responsibilities to plan a production.	TD.Cr.16.h: Collaboration Collaborate as a creative team with specified roles to make artistic, interpretive choices in a devised or scripted work.

Content Area: Theatre Production (TD)

Standard TD 2: PERFORM—Students will analyze, develop, and convey meaning through the presentation of artistic work.

Performance Indicators (by Grade Band)

Artistic Process	K-2 (e)	3-5 (i)	6-8 (m)	9-12 (h)
Perform	TD.P.1.e: Design Execution Arrange available furniture and props in a classroom for a show.	TD.P.6.i: Design Execution Explore technical elements in a guided drama experience.	TD.P.11.m: Design Execution Demonstrate a specific production role safely and within overall script and technical requirements.	TD.P.16.h: Design Execution Execute a specific production role safely and within overall script and technical requirements for a school or public performance.
	TD.P.2.e: Tools and Technology Use Use arts and crafts in the creation of props, costumes, or scenery.	TD.P.7.i: Tools and Technology Use Use basic hand tools safely in the creation of props, costumes, and set elements under direction of a teacher.	TD.P.12.m: Tools and Technology Use Use common hand tools and technology safely and properly to create or run a theatrical production element under direction of a teacher.	TD.P.17.h: Tools and Technology Use Operate machinery, tools or control boards safely and as directed under supervision of a teacher or professional technician to support production elements of a theatre work.
	TD.P.3.e: Design and Management Documentation Share production element(s) created.	TD.P.8.i: Design and Management Documentation Collect artifacts to highlight two or more production elements created or utilized.	TD.P.13.m: Design and Management Documentation Organize artifacts and documents with personal commentary in a portfolio for a production assignment.	TD.P.18.h: Design and Management Documentation Assemble documents, renderings, and artifacts in a portfolio that includes design concept and working within the parameters of a production.

Content Area: Theatre Production (TD)

Standard TD 2: PERFORM—Students will analyze, develop, and convey meaning through the presentation of artistic work. (cont'd)

Performance Indicators (by Grade Band)

Artistic Process	K-2 (e)	3-5 (i)	6-8 (m)	9-12 (h)
Perform (cont'd)	TD.P.4.e: Public Presentation Perform in a production role within a classroom presentation.	TD.P.9.i: Public Presentation Exercise developmentally appropriate stage etiquette for school or public performances.	TD.P.14.m: Public Presentation Run one production element in a classroom or public performance.	TD.P.19.h: Public Presentation Execute a production element in a classroom or public performance.
	TD.P.5.e: Protocol Exercise developmentally appropriate stage etiquette for school or public performances.	TD.P.10.i: Protocol Exercise appropriate conduct for school or public performances.	TD.P.15.m: Protocol Exhibit developmentally appropriate stage etiquette for public performances; adhere to copyright laws, including rights, royalties, and recording.	TD.P.20.h: Protocol Exhibit developmentally appropriate stage etiquette for public performances; adhere to copyright laws, including rights, royalties, and recording.

Content Area: Theatre Production (TD)

Standard TD 3: RESPOND—Students will critically interpret intent and meaning in order to evaluate artistic work.

Performance Indicators (by Grade Band)

Artistic Process	K-2 (e)	3-5 (i)	6-8 (m)	9-12 (h)
Respond	TD.R.1.e: Analysis Respond to a theatrical work by sharing what is seen, heard, and/or felt.	TD.R.4.i: Analysis Identify separate production elements in a theatrical work.	TD.R.7.m: Analysis Express preferences for effectiveness of theatrical production elements (what works and what does not work).	TD.R.10.h: Analysis Critically analyze the effectiveness of design and technical elements for a theatrical production.
	TD.R.2.e: Reflection Assess personal participation in a production.	TD.R.5.i: Reflection Assess personal participation in a production with examples from experiences.	TD.R.8.m: Reflection Assess personal participation in a production through critique using theatre vocabulary.	TD.R.11.h: Reflection Assess personal participation in a production through constructive critique using precise theatre vocabulary.
	TD.R.3.e: View Performance Demonstrate developmentally appropriate audience etiquette.	TD.R.6.i: View Performance Demonstrate developmentally appropriate audience etiquette.	TD.R.9.m: View Performance Demonstrate developmentally appropriate audience etiquette.	TD.R.12.h: View Performance Demonstrate developmentally appropriate audience etiquette at a professional performance.

Content Area: Theatre Production (TD)

Standard TD 4: CONNECT—Students will relate prior knowledge and personal experience with theatre to cultural and historical contexts.

Performance Indicators (by Grade Band)

Artistic Process	K-2 (e)	3-5 (i)	6-8 (m)	9-12 (h)
Connect	TD.Cn.1.e: Cultural Social Context Express how theatre relates to self and others.	TD.Cn.5.i: Cultural Social Context Explain how theatre relates to self, others, and the world.	TD.Cn.9.m: Cultural Social Context Examine how theatre relates to self, others, and the world in the past and present.	TD.Cn.13.h: Cultural Social Context Compare and contrast how two or more cultural or historical traditions impact production, text, or script.
	TD.Cn.2.e: Research Identify parts of a story (characters, setting, and plot).	TD.Cn.6.i: Research Identify the "given circumstances," environmental and situational conditions that influence a theatrical work.	TD.Cn.10.m: Research Describe the "given circumstances," environmental and situational conditions that influence a theatrical work.	TD.Cn.14.h: Research Explain production choices based on the "given circumstances," environmental and situational conditions of a theatrical work.
	TD.Cn.3.e: Career Connections Identify a production profession in theatre.	TD.Cn.7.i: Career Connections Describe a production profession in theatre.	TD.Cn.11.m: Career Connections Explore and differentiate theatre production professions.	TD.Cn.15.h: Career Connections Explain what knowledge or training is required for theatre production careers, and how theatrical skills translate to other fields.